EXPLOSIONPROOF SOLENOIDS

Product Index

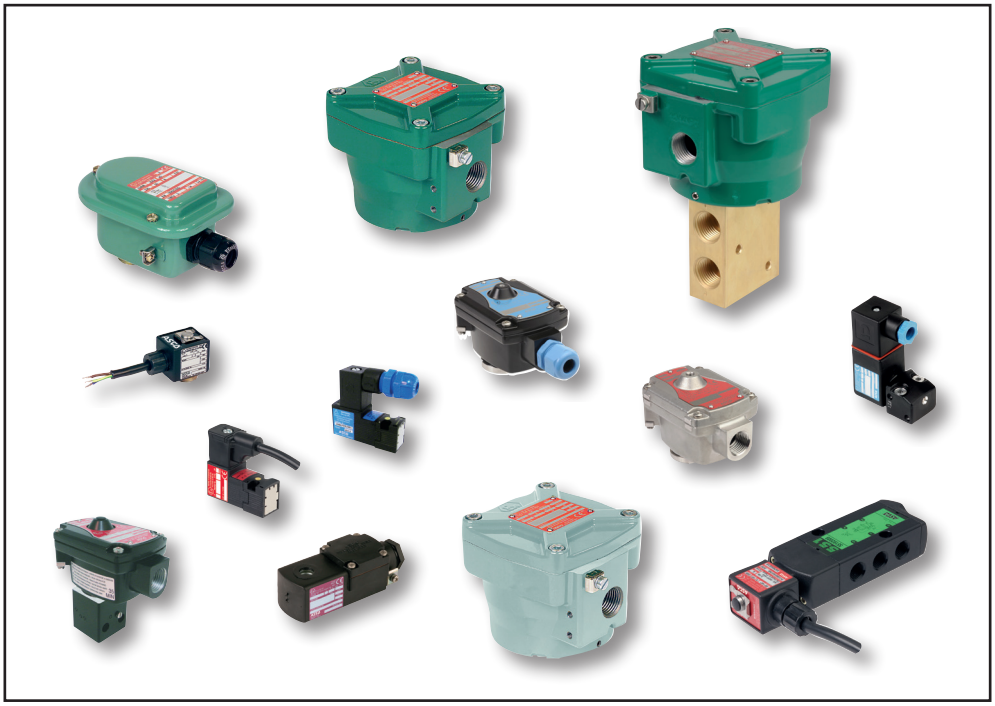

Function	Description	Pipe connections	Series	Page
	Hazardous areas			IV-V
	Identification			VI
	Equipment groups and temperature classes / Certificates - Products			VII-VIII
	Standards (CENELEC - CEN standards)	see section: «General & Engineering Information» ▶ www.asco.com		
	Types of protection			
	*Ex **d** (flameproof), **ATEX-IECEx**:*			
3/2	• Operators, aluminium (LPKF) or stainless steel (WSLPKF) II2G Ex d IIB+H2 Gb T6..T4, II2D Ex tb IIIC Db IP66/IP67		LPKF WSLPKF	1
2/2	• Operators, aluminium (NF) or stainless steel (WSNF) II 2G Ex db IIC T6..T4 Gb, II 2D Ex tb IIIC Db IP66/67		NF/WSNF	3
3/2 NC	• Solenoid valves, direct operated, aluminium body, with LPKF type operator II2G Ex d IIB+H2 Gb T6..T4, II2D Ex t IIIC Db IP67	ISO 15218 (CNOMO, size 30)	314	5
3/2 NC-5/2-5/3 NAMUR	• Solenoid valves, pilot operated, aluminium body (LPKF-WSLPKF-NF-WSNF-374/NK)	1/4-1/2	551-553	3/2 5/2-5/3 NAMUR
3/2 NC-5/2 NAMUR	• Solenoid valves, pilot operated, brass body (LPKF-WSLPKF-NF-WSNF)	1/4	551	3/2 5/2 NAMUR
3/2 NC-5/2-5/3 NAMUR	• Solenoid valves, pilot operated, stainless steel body (LPKF-WSLPKF-NF-WSNF-314/LPKF)	1/4-1/2	551-553	3/2 5/2-5/3 NAMUR
3/2 U	• Solenoid valves, direct operated, brass or stainless steel body II 2 G Ex d IIC Gb T6..T4, II 2 D Ex tb IIIC Db IP67	1/4-1/2 (NPT) 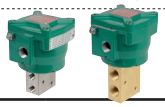	327 (1)	Process Industry

(1) WSCR / WSCEM / WSCRIS

00128GB-2018/R01
Availability, design and specifications are subject to change without notice. All rights reserved.

BCAE Automation Solutions
青岛秉诚自动化设备有限公司
地址：中国·青岛市重庆南路99号海尔云街甲3号楼7F
服务热线：4006-918-365
网址：http://www.ivalve.cc
传真：(86-532)585-10-365
Email：sales@bechinas.com

Function	Description	Pipe connections	Series	Page
	*Ex **m** (encapsulated), **ATEX-IECEx**:*			
2/2-3/2	• Operators, moulded coil (EM5-MXX) II 2G Ex mb IIC T5..T3 Gb, II 2D Ex mb IIIC 100°C..200°C Db IP67		PV	7
3/2 NC-5/2-5/3 NAMUR	• Solenoid valves, pilot operated, aluminium body (PV)	1/4-1/2	551-553	3/2 5/2-5/3 NAMUR
3/2 NC-5/2 NAMUR	• Solenoid valves, pilot operated, brass body (PV)	1/4	551	3/2 5/2 NAMUR
3/2 NC-5/2-5/3 NAMUR	• Solenoid valves, pilot operated, stainless steel body (PV)	1/4-1/2	551-553	3/2 5/2-5/3 NAMUR
	*Ex **e mb** (increased safety/encapsulated), **ATEX-IECEx**:*			
3/2	• Operator, increased safety/encapsulated II 2G Ex e mb IIC T4 Gb, II 2D Ex tb IIIC T135°C Db IP67		WBLP	9
2/2-3/2	• Operators, increased safety/encapsulated (M6-MXX-M12) II 2G Ex e mb IIC T6..T3 Gb, II 2D Ex tb IIIC T85°C..T200°C Db IP66/67		EM/WSEM	11
3/2 NC-5/2-5/3 NAMUR	• Solenoid valves, pilot operated, aluminium body (EM/WSEM)	1/4-1/2	551-553	3/2 5/2-5/3 NAMUR
3/2 NC-5/2 NAMUR	• Solenoid valves, pilot operated, brass body (EM/WSEM)	1/4	551	3/2 5/2 NAMUR
3/2 NC-5/2-5/3 NAMUR	• Solenoid valves, pilot operated, stainless steel body (EM/WSEM)	1/4-1/2	551-553	3/2 5/2-5/3 NAMUR
	*Ex **ia** (intrinsically safe), **ATEX-IECEx**:*			
3/2	• Operator, aluminium (LI) II 1G Ex ia IIC T6 Ga, II 2D Ex tb IIIC T85°C IP66/IP67 Db • Operator, stainless steel (WSLI) II 1G Ex ia IIC T6 Ga, II 2D Ex tb IIIC T85°C IP66/IP67 Db		LI WSLI	13
3/2 NC	• Solenoid valves, direct operated, plastic body, pad mount, ISO 15218 (CNOMO, size 15) II 1 G Ex ia IIC T6..T4 Ga, II 1 D Ex ia IIIC T85°C .. T135°C IP65 Da		302	15
3/2 NC	• Solenoid valves, direct operated, aluminium body, pad mount, ISO 15218 (CNOMO, size 30) II 1G Ex ia IIC T6 Ga, II 2D Ex ib IIIC T85°C Db IP67		195/LISC	19
3/2 NC	• Solenoid valves, direct operated, brass or stainless steel body II 2G Ex ia IIC T6 Gb, II 2D Ex tb IIIC T85°C Db IP66/67	1/4	327	NFIS WSNFIS
3/2 NC-5/2-5/3 NAMUR	• Solenoid valves, pilot operated, aluminium body (LI-302-195/LISC-630/piezotronic)	1/4-1/2	551-553	3/2 5/2-5/3 NAMUR
3/2 NC-5/2 NAMUR	• Solenoid valves, pilot operated, brass body (LI-WSLI-302-630/piezotronic)	1/4	551	3/2 5/2 NAMUR
3/2 NC-5/2-5/3 NAMUR	• Solenoid valves, pilot operated, stainless steel body (LI-WSLI-195/LISC)	1/4-1/2	551-553	3/2 5/2-5/3 NAMUR
	*Ex **nA** (non-sparking protection), **ATEX**:*			
2/2 NC 3/2 NC-NO-U	• Solenoid valves, direct operated, plastic body, pad mount, ISO 15218 (CNOMO, size 15) II 3G Ex nA IIC T6..T4 Gc, II 3D Ex tc IIIC IP65 T85°C..T135°C Dc		302	23

00128GB-2018/R01
Availability, design and specifications are subject to change without notice. All rights reserved.

BCAE Automation Solutions
青岛秉诚自动化设备有限公司
地址：中国·青岛市重庆南路99号海尔云街甲3号楼7F
服务热线：4006-918-365
网址：http://www.ivalve.cc
传真：(86-532)585-10-365
Email：sales@bechinas.com

Function	Description	Pipe connections	Series	Page
	*Dust applications, **ATEX**:*			
	moulded coils types with connectors II 3 D Ex tc IIIC T115°C/T110°C Dc IP65X		SG	25
	*Constructional safety **ATEX**:*			
3/2 NC-5/2-5/3 NAMUR	• Air operated valves, aluminium body II 2GD IIB or IIC	1/4-1/2	551-553	3/2 5/2-5/3 NAMUR
3/2 NC-5/2 NAMUR	• Air operated valves, stainless steel body II 2GD IIB or IIC	1/4-1/2 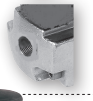	551-553	3/2 5/2 NAMUR
2/2 - 3/2	• Pressure operated valves II 2 GD c IIB T4 T135°C / II 2 D c T135°C II 3 GD c T4 T135°C	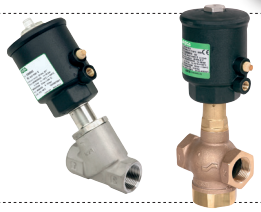	290/390	Pressure Operated Valves [2/2 (www.asco.com) - 3/2 (www.asco.com)]
2/2 - 3/2	• Pressure operated valves II 2 GD c x°C (Tx)		298/398	Pressure Operated Valves [2/2 (www.asco.com) - 3/2 (www.asco.com)]
2/2 - 3/2	• Pressure operated valves II 2 GD c T6		287/387	Pressure Operated Valves [2/2 (www.asco.com) - 3/2 (www.asco.com)]
2/2 - 3/2	• Pressure operated valves II 2 GD c T6 T85°C / II 3 GD c T85°C X		AD	Pressure Operated Valves [2/2 (www.asco.com) - 3/2 (www.asco.com)]
2/2	• Pressure or manual operated diaphragm aseptic valves II 2 GD c K IIB	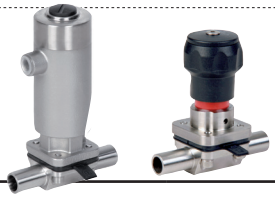	Steripur KMA KMD	Biotechnology & Pharmaceutical Catalogue
	Other types of protection and national standards:			
2/2-3/2	• Operators, encapsulated, NEMA (EF)	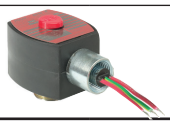	EF	EF/EV
	Accessories:			
	• Cable glands, ATEX		882	27

00128GB-2018/R01
Availability, design and specifications are subject to change without notice. All rights reserved.

BCAE Automation Solutions
青岛秉诚自动化设备有限公司
地址：中国·青岛市重庆南路99号海尔云街甲3号楼7F
服务热线：4006-918-365
网址：http://www.ivalve.cc
传真：(86-532)585-10-365
Email：sales@bechinas.com

SOME HISTORY

The classification of hazardous areas into zones established the level of protection required for electrical equipment installed in explosive gas and dust atmospheres.

The two following standards define the areas:

IEC-EN 60079-10-1: Classification of areas, explosive gas atmospheres

IEC-EN 60079-10-2: Classification of areas, combustible dust atmospheres

The selection and construction of electrical installations is defined by standard IEC-EN 60079-14.

DEFINITION OF A PLACE WHERE A POTENTIALLY EXPLOSIVE ATMOSPHERE MAY OCCUR

The classification of an installation into distinct zones has two objectives (according to ATEX 1999/92/EC):

- To define the categories of equipment used in the zones indicated, provided they are suitable for gases, vapours or mists and/or dusts.
- To classify hazardous places into zones to prevent ignition sources and be able to select the correct electrical and non-electrical equipment accordingly. The zones are defined on the basis of the occurrence of explosive gaseous or dusty atmospheres.

GAS GROUPS

Group II : Equipment intended for use in places with an explosive gas atmosphere other than mines susceptible to firedamp.

Group I : Equipment intended for use in mines susceptible to firedamp.

	Zone	*Category (ATEX 2014/34/EU)*	*Presence of explosive atmospheres*
Group II	zone **0**	**1 G** [1]	**Continuous**, **frequent** or for long periods
	zone **1**	**2 G**	**Intermittent** in normal operation (**likely**)
	zone **2**	**3 G**	**Occasional** or for short periods (never in normal operation)
Group I (mines)		**M1** [1]	**Presence** (methane, dust)
		M2	**Risk of presence** (methane, dust)

DUST GROUPS (IEC 60079-0)

Group III : Equipment intended for use in places with an explosive dust atmosphere other than mines susceptible to firedamp.

	Zone	*Category (ATEX 2014/34/EU)*	*Presence of explosive atmospheres*
Group III	zone **20**	**1 D** [1]	**Continuous**, **frequent** or for long periods (air/cloud of combustible dust)
	zone **21**	**2 D**	**Intermittent** in normal operation
	zone **22**	**3 D**	**Occasional** or for short periods

The classification of the installation is **the responsibility of the user.** He must individually evaluate each installation to determine the differences between them.

Separate assessments must be made for places with potentially explosive atmospheres caused by gases or vapours and for those caused by dusts.

EQUIPMENT PROTECTION LEVELS - EPLs

In normal circumstances the effect of the EPLs will be to retain the normal zone/equipment protection relationship. If, however, the risk is considered especially severe, then the required EPL for the zone may be increased. Similarly, if the risk is deemed to be especially small or negligible, the EPL may be reduced from the norm.

The following table shows the normal relationship between EPL and zone/category (without supplementary risk assessment).

Equipment Protection Level (EPL)	Normal Applicable Zone(s)	Category (2014/34/EU)
Ga	0 (and 1 and 2)	1G
Gb	1 (and 2)	2G
Gc	2	3G
Da	20 (and 21 and 22)	1D
Db	21 (and 22)	2D
Dc	22	3D
Ma / Mb	mines	M1 / M2

[1] G = gas ; D = dust ; M = mines

00129GB-2017/R01
Availability, design and specifications are subject to change without notice. All rights reserved.

BCAE Automation Solutions
青岛秉诚自动化设备有限公司
地址：中国·青岛市重庆南路99号海尔云街甲3号楼7F
服务热线：4006-918-365
网址：http://www.ivalve.cc
传真：(86-532)585-10-365
Email：sales@bechinas.com

A

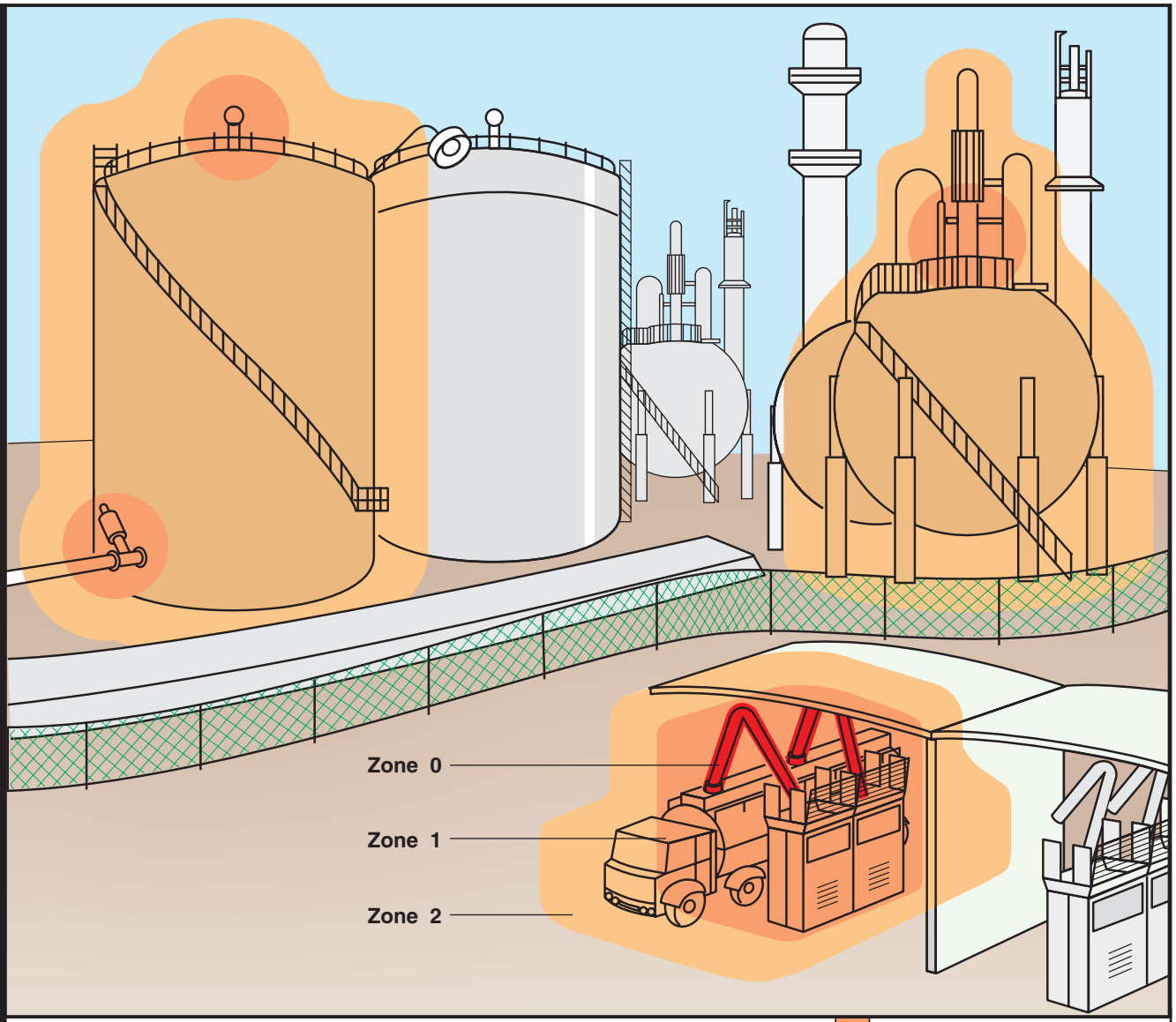

B

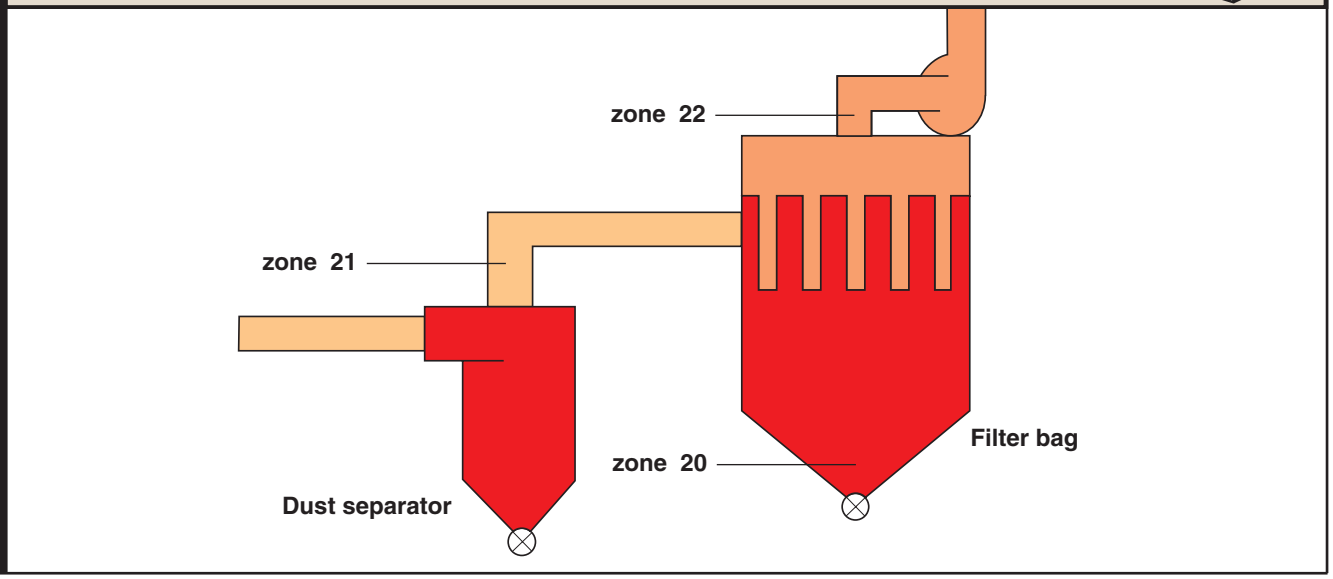

EXAMPLES OF A CLASSIFICATION INTO ZONES

Drawing A of an explosive atmosphere caused by gas:
Drawing B of an explosive atmosphere caused by dust:

Zone 0 — Zone 1 — Zone 2
Zone 20 — Zone 21 — Zone 22

Above drawings **A** *and* **B** *are an example only and must not be used as a model for an actual plant whose design is, in every case, the responsibility of the constructor and operator.*

00129GB-2017/R01
Availability, design and specifications are subject to change without notice. All rights reserved.

BCAE Automation Solutions
青岛秉诚自动化设备有限公司
地址：中国·青岛市重庆南路99号海尔云街甲3号楼7F
服务热线：4006-918-365
网址：http://www.ivalve.cc
传真：(86-532)585-10-365
Email：sales@bechinas.com

HOW CAN ATEX, EN-IEC 60079-0 OR EN 13463-1 APPROVED APPARATUS FOR USE IN EXPLOSIVE ATMOSPHERES BE IDENTIFIED?

Conformity to the European Directives, ***CE marking.***

Identification number of the Notified Body *issuing the EC type-examination* ***certificate*** *(Example: 0081 = LCIE).*

Epsilon x *marking for equipment for use in explosive atmospheres.*

I : Mines II : Surface industries

Categories : 1 (zone 0) - 2 (zone 1) - 3 (zone 2)

Mines : M1 M2

Gas : G

Dusts : D

Specific symbol for explosion-proof protection according to EN / IEC

TYPES OF PROTECTION

Electrical apparatus, gas atmospheres:
"d": Flameproof enclosure EN 60079-1
"e": Increased safety EN 60079-7
"i": Intrinsic safety EN 60079-11 (ia/ib/ic)
"m": Encapsulation EN 60079-18 (ma/mb/mc)
"n": Non-incendive EN 60079-15 (nA/..)

Electrical apparatus, dust atmospheres:
"t": Protection by enclosures EN 60079-31 (ta/tb/tc)
"m": Protection by encapsulation EN 60079-18 (ma/mb/mc)
"i": Protection by intrinsic safety EN 60079-11 (ia/ib/ic)

Non-electrical apparatus:
"c": Protection by constructional safety EN 13463-5

CE 0081 Ex II 2 G — Ex db — IIC Gb — T4

CE 0081 Ex II 2 D — Ex tb — Db — T135°C

CE 0081 Ex II 1 GD — c — T85°C T6

Ex db — IIB Gb — T6
Ex tb — IIIC Db IP67 T85°C

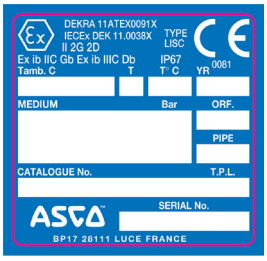

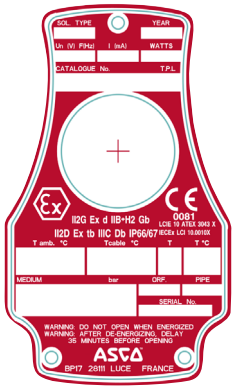

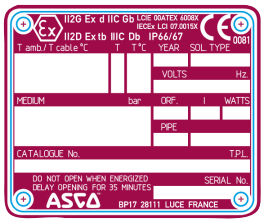

ma or ia = for use in zone 0 gas (D = Dusts)
mb or ib = for use in zone 1 gas (D = Dusts)

Equipment groups (IIA, IIB, IIC, IIIA, IIIB, IIIC)

Maximum surface temperature

Temperature class

Enclosure ingress protection (IP) rating for dust (EN 60529)

Equipment Protection Level (EPL)

00129GB-2017/R01
Availability, design and specifications are subject to change without notice. All rights reserved.

BCAE Automation Solutions
青岛秉诚自动化设备有限公司
地址：中国·青岛市重庆南路99号海尔云街甲3号楼7F
服务热线：4006-918-365
网址：http://www.ivalve.cc
传真：(86-532)585-10-365
Email：sales@bechinas.com

CLASSIFICATION OF GASES INTO EXPLOSION GROUPS

Group I : Electrical equipment intended for use in the underground parts of mines, and to those parts of surface installations of such mines, likely to become endangered by firedamp and/or combustible dust.

Group II : Electrical equipment intended for use in other places likely to become endangered by explosive atmospheres (surface industries).

For the types of protection "**d**" and "**i**", group **II** is subdivided into **IIA**, **IIB**, **IIC**. Electrical apparatus certified for **IIB** may be used in applications requiring apparatus to be certified for group **IIA**. Electrical apparatus certified for **IIC** may be used in applications requiring apparatus to be certified for groups **IIA** and **IIB**.

For example the "d" and "i" types of protection are respectively subdivided according to the Maximum Experimental Safe Gap (MESG) and to the Minimum Igniting Current (MIC).

Electrical apparatus certified for **IIB** may be certified for use with a gas belonging to group **IIC**. In this case, the identification is supplemented with the chemical symbol or the name of the gas (example: Ex d IIB + H_2 according to EN 60079-0 and EN 60079.1).

The table below indicates the groups to which some gas mixtures belong:

Groups		Gas	Ignition temperature [1] (°C)	Temperature class					
				T1	T2	T3	T4	T5	T6
I		methane (firedamp)							
II	A	acetone	540	●					
		acetic acide	485	●					
		ammonia	630	●					
		ethane	515	●					
		methylene chloride	556	●					
		methane (CH_4)	537	●					
		carbon monoxyde	605	●					
		propane	470	●					
		n-butane	365		●				
		n-butyl	370		●				
		n-hexane	240			●			
		acetaldehyde	140				●		
		ethyl ether	160				●		
		ethyl nitrite	90						●
	B	ethylene	425		●				
		ethyl oxyde	429-440		●				
		hydrogen sulfide	270			●			
	C	acetylene (C_2H_2)	305		●				
		carbon disulphide (CS_2)	102						●
		hydrogen (H_2)	560	●					

[1] Temperature of a hot surface able to ignite a gas mixture.
The ignition temperature of the gas mixture must be higher than the maximum surface temperature. In practice, a 10 to 20% safety margin is observed between the ignition temperature and the rated nameplate temperature.
The ignition temperature of a cloud of dust is generally between 300 and 700°C. At 150 to 350°C, the ignition temperature of a layer of dust is far below that of a dust cloud. A burning dust layer can initiate a dust explosion if brought in contact with a combustible dust cloud, so these values must be taken into account to limit the risk.

TEMPERATURE CLASS

The temperature classification is based on the maximum surface temperature of equipment. That is the highest temperature any part of or the entire surface of an electrical device can reach under the most unfavourable operating conditions capable of igniting a surrounding explosive atmosphere.

Group I : Temperature ≤ 150°C or ≤ 450°C according to coal dust accumulation on equipment

Group II : Equipment must be classified and marked:
- preferably with the temperature class (T classification)
- defined by the surface temperature or,
- limited to the specified flammable gases or dusts for which it is approved, if necessary (and marked accordingly).

Temperature class	Maximum surface temperature (°C)	Ignition temperature [1] (°C)
T1	450	> 450
T2	300	> 300
T3	200	> 200
T4	135	> 135
T5	100	> 100
T6	85	> 85

00129GB-2017/R01
Availability, design and specifications are subject to change without notice. All rights reserved.

BCAE Automation Solutions
青岛秉诚自动化设备有限公司
地址：中国·青岛市重庆南路99号海尔云街甲3号楼7F
服务热线：4006-918-365
网址：http://www.ivalve.cc
传真：(86-532)585-10-365
Email：sales@bechinas.com

CLASSIFICATION OF DUSTS INTO EXPLOSION GROUPS (IEC 60079-0)

Group III : Electrical equipment intended for use in places with an explosive dust atmosphere other than mines susceptible to firedamp.

Group **III** is subdivided into **IIIA** (combustible flyings), **IIIB** (non-conductive dust) and **IIIC** (conductive dust).

Combustible dust: Finely divided solid particles, 500 µm or less in nominal size, which may be suspended in air, may settle out of the atmosphere under their own weight, may burn or glow in air, and may form explosive mixtures with air at atmospheric pressure and normal temperatures.

Non-conductive dust: Combustible dust with electrical resistivity greater than 10^3 Ω.m

Conductive dust: Combustible dust with electrical resistivity equal to or less than 10^3 Ω.m

Combustible dust	Ignition temperature [1] (°C)	Self-ignition temperature of dust layers [1] (°C)
Starch	440	290
Aluminium	530	280
Cotton	560	350
Cereals	420	290
Magnesium	610	410
Soybean	500	245
Sulphur	280	280
Tabacco	450	300

(1) The maximum surface temperature must be identified and suitable for the specified type of dust present (equipment marked for zone 21).
In order to prevent the ignition of dusty atmospheres, the maximum surface temperature needs to be limited. It must not exceed:
- 2/3 of the auto-ignition temperature of the specified **cloud of dust**,
- the auto-ignition temperature of a 5 mm **layer of dust** minus 75°C.

TYPE EXAMINATION CERTIFICATES **SELECTION OF PRODUCTS**

available at "www.asco.com"

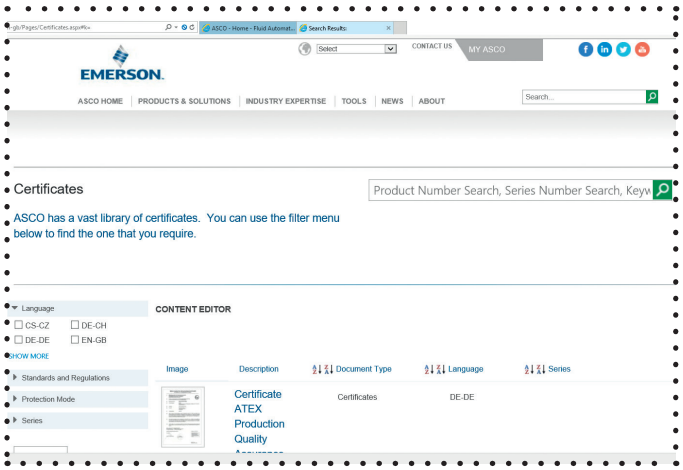

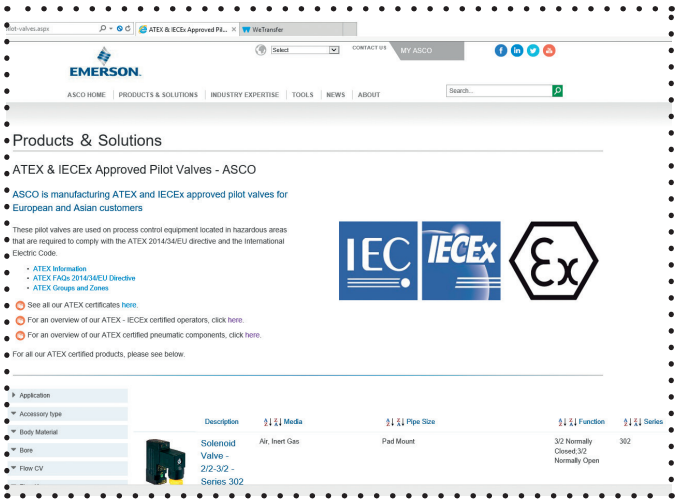

Certificates issued by the IECEx Certified Equipment Program are issued as "Electronic Certificates" and are live on the IECEx Website. This enables full public access for viewing and printing. Visit the IECEx "On-Line Certificate" System.

00129GB-2017/R01
Availability, design and specifications are subject to change without notice. All rights reserved.

BCAE Automation Solutions
青岛秉诚自动化设备有限公司
地址：中国·青岛市重庆南路99号海尔云街甲3号楼7F
服务热线：4006-918-365
网址：http://www.ivalve.cc
传真：(86-532)585-10-365
Email：sales@bechinas.com

OPERATORS

for potentially explosive atmospheres
flameproof enclosure
II2G Ex d IIB+H2 Gb T6...T4, II2D Ex tb IIIC Db IP66/IP67
aluminium or stainless steel enclosure

Series
LPKF
WSLPKF

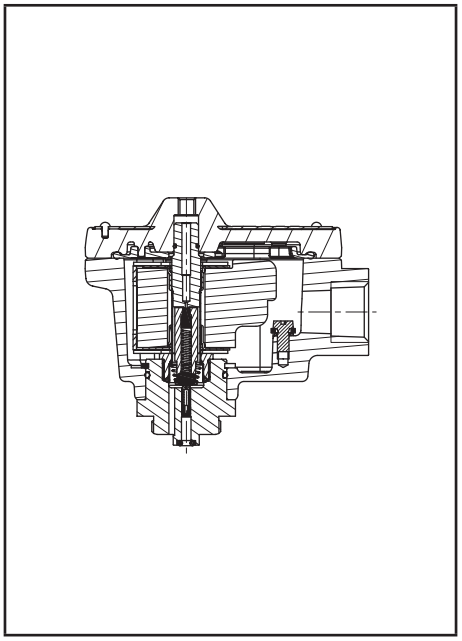

FEATURES

- *Explosionproof operator for use in potentially explosive atmospheres according to ATEX-Directive 2014/34/EU*
  EC type examination certificate no.: ***LCIE 10 ATEX 3043X***
  IECEx Certificate of Conformity no.: ***IECEx LCI 10.0010X***
- *Compliance with the Essential Health and Safety Requirements has been assured by compliance with the International and European Standards IEC and EN: 60079-0, 60079-1 and 60079-31*
- *Easy electrical installation by means of a screw terminal coil*
- *Enclosure provided with a 1/2 NPT threaded entry hole for a broad range of cable entries*
- *Ingress protection degree IP67 - NEMA 4/4X*
- *A wide range of valves can be supplied with the operator*

CONSTRUCTION

Solenoid enclosure	LPKF	Aluminium, cataphorese black painting
	WSLPKF	Stainless steel (AISI 316L)
Bonnet	LPKF	Stainless steel
	WSLPKF	Stainless steel (AISI 316L)
Cover screws		Stainless steel
Core, core tube and plugnut		Stainless steel
Seals		VMQ
Upper disc		FPM
Lower disc		NBR
Nameplate		Stainless steel
Coil connection		Embedded screw terminals
Safety code		II2G Ex d IIB+H2 Gb T6...T4
		II2D Ex tb IIIC Db T85°C...T135°C IP66/IP67

ELECTRICAL CHARACTERISTICS

Standard voltages	DC (=) : 24V - 48V
	AC (~) : 24V - 48V - 115V - 230V / 50 Hz

TEMPERATURE CLASSIFICATION TABLES

AC solenoids (~)

Pn (watt)	solenoid size				maximum ambient °C (1) (5) surface temperature			
			M6		T6 85°C	T5 100°C	T4 135°C	
insulation class F (155°C) 100% E.D.								
-			-		-	-	-	-
2,4 (2) (4)			●		40	65	80	-

DC solenoids (=)

Pn (watt)	solenoid size				maximum ambient °C (1) (5) surface temperature			
			M6		T6 85°C	T5 100°C	T4 135°C	
insulation class F (155°C) 100% E.D.								
0,5 (3)			●		60	-	-	-
2,1 (4)			●		40	-	80	-

Check the wattage compatibility with the product selected.

(1) **The minimum allowable ambient temperature is -40°C for the operator.** Actual temperature range can be limited depending on valve operation limits.
(2) AC (~): rectified coil construction.
(3) 24 V DC value.
(4) Maximum cold wattage.
(5) For the layout of the control circuit, see the installation and maintenance instructions at: www.asco.com

CONNECTIONS

- Any IECEx-ATEX approved cable entry device can be fitted in the 1/2" NPT threaded entry hole
- Internal and external earthing connection
- The operator can be rotated through 360° to select the most favourable position for cable entry

OPTIONS

- Brass nickel plated cable gland

ORDERING INFORMATION

A valve supplied with the explosionproof operator will be identified with prefix LPKF or WSLPKF before the catalogue number.

Example: **LPKF** G 551B305 24V/DC
LPKF G 552A301 230V/AC
WSLPKF G 553A318 230V/AC

operator — pipe thread — basic number — voltage

01050GB-2017/R01
Availability, design and specifications are subject to change without notice. All rights reserved.

BCAE Automation Solutions
青岛秉诚自动化设备有限公司
地址：中国·青岛市重庆南路99号海尔云街甲3号楼7F
服务热线：4006-918-365
网址：http://www.ivalve.cc
传真：(86-532)585-10-365
Email：sales@bechinas.com

DIMENSIONS (mm), WEIGHT (kg)

TYPE LPKF

Prefix "LPKF" Solenoid
Aluminium, epoxy coated
IEC, EN: 60079-1, 60079-31
II2G Ex d IIB+H2 Gb T6...T4 - II2D Ex tb IIIC Db IP66/IP67

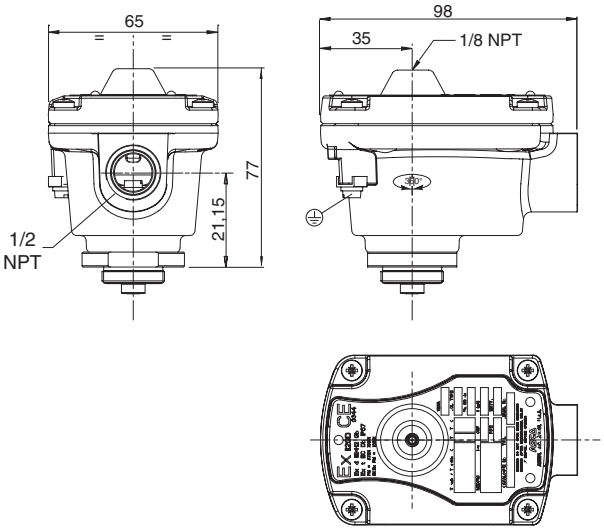

TYPE WSLPKF

Prefix "WSLPKF" Solenoid
Stainless steel, epoxy coated
IEC, EN: 60079-1, 60079-31
II2G Ex d IIB+H2 Gb T6...T4 - II2D Ex tb IIIC Db IP66/IP67

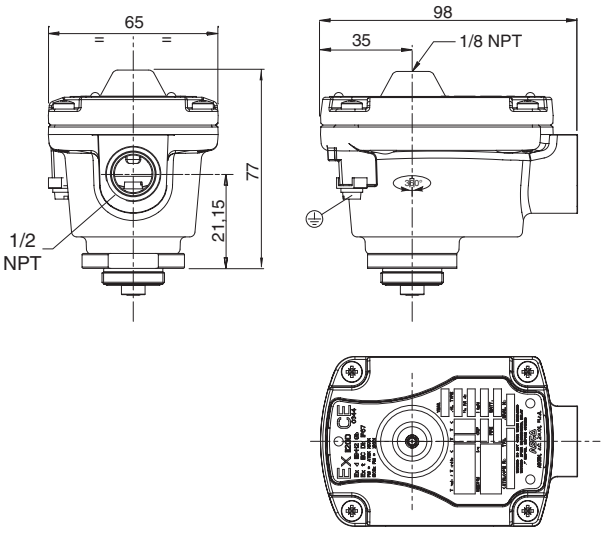

prefix	weight
LPKF	0,55
WSLPKF	1,16

01050GB-2017/R01
Availability, design and specifications are subject to change without notice. All rights reserved.

BCAE Automation Solutions
青岛秉诚自动化设备有限公司
地址：中国·青岛市重庆南路99号海尔云街甲3号楼7F
服务热线：4006-918-365
网址：http://www.ivalve.cc
传真：(86-532)585-10-365
Email：sales@bechinas.com

OPERATORS

for potentially explosive atmospheres
flameproof enclosure
II 2G/D Ex **db** IIC T6..T4 Gb / Ex **tb** IIIC Db IP66/IP67
aluminium or stainless steel enclosure

Series
NF
WSNF

FEATURES

- *Explosionproof operator for use in potentially explosive atmospheres according to ATEX-Directive 2014/34/EU*
  *EC type examination certificate no.: **LCIE 00 ATEX 6008 X***
  *IECEx Certificate of Conformity no.: **IECEx LCI 07.0015X***
- *Compliance with the Essential Health and Safety Requirements has been assured by compliance with the International and European Standards EN-IEC 60079-0, EN-IEC 60079-1 and EN-IEC 60079-31*
- *Easy electrical installation by means of a screw terminal coil*
- *Enclosure provided with a 1/2 NPT threaded entry hole (M20 x 1,5 in option) for a broad range of cable entries*
- *Ingress protection degree IP66/67*
- *A wide range of valves can be supplied with the operator*

CONSTRUCTION

Solenoid enclosure	NF	Chromated aluminium, epoxy coated
	WSNF	Stainless steel (AISI 316L)
Bonnet	NF	Steel (zinc plated)
	WSNF	Stainless steel (nickel plated)
Core, core tube and plugnut	all	Stainless steel
Shading coil	all	Copper or silver
Nameplate	NF	Stainless steel
	WSNF	Stainless steel
Coil connection	all	Embedded screw terminals
Fasteners & screws	all	Stainless steel
Safety code		IECEx / Ex II 2G Ex db IIC T6..T4 Gb
		IECEx / Ex II 2D Ex tb IIIC 85°C..135°C Db IP66/67

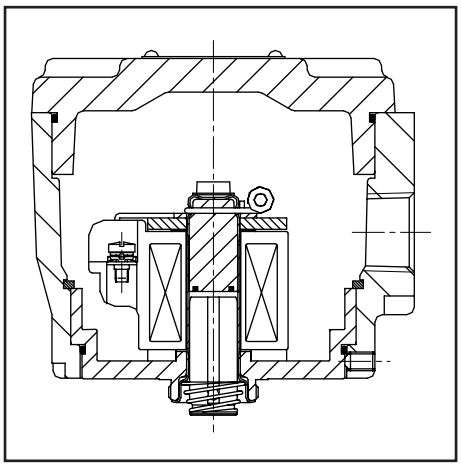

ELECTRICAL CHARACTERISTICS

Standard voltages	DC (=) : 24V - 48V
(Other voltages and 60 Hz on request)	AC (~) : 24V - 48V - 115V - 230V(3) / 50 Hz

TEMPERATURE CLASSIFICATION TABLES

AC (~) solenoids

Pn (watt)	solenoid size MXX	solenoid size M12			maximum ambient °C (1) surface temperature T6 85°C	T5 100°C	T4 135°C	T3 200°C
insulation class F/H (155°C/180°C) 100% E.D.								
1,85(2)(3)		●			75	80		
3,7 (2)		●			60	75	100	
5,8 (2)		●			60	75	100	
10,0 (2)	●				40	60	75	
10,0 (2)		●			40	60	100	
10,5	●				25	40	60	
13,4 (2)	●				40	60	75	
14,1 (2)		●			40	60	90	
15,4		●			25	40	60	
16,5		●			40	60	75	
16,7	●					25	40	
20,0		●				25	40	
20,5	●						25	
28,0		●					25	

DC (=) solenoids

Pn (watt)	solenoid size MXX	solenoid size M12			maximum ambient °C (1) surface temperature T6 85°C	T5 100°C	T4 135°C	T3 200°C
insulation class F/H (155°C/180°C) 100% E.D.								
1,8		●			75	80		
3,6		●			60	75	100	
5,7		●			60	75	100	
10,0		●			40	60	100	
11,2	●				40	60	75	
14,0		●			40	60	90	
16,8		●			40	60	75	
19,7	●				25	40	60	
23,0		●			25	40	60	
26,6		●			25	40	60	
29,5		●				25	40	
36,2		●				25	40	

Check the wattage compatibility with the product selected.

(1) **The minimum allowable ambient temperature is -60°C for the operator.** Actual temperature range can be limited depending on valve operation limits.

(2) AC (~): rectified coil construction.

(3) 230 V AC does not exist (Pn 1,85 W).

ORDERING INFORMATION

A valve supplied with the explosionproof operator will be identified with prefix NF or WSNF before the catalogue number.

Example: **NF** E 210D095 230V/50 Hz

- **NF** – operator
- E – pipe thread ISO 7/1
- 210D095 – basic number
- 230V/50 Hz – voltage

A valve supplied with the explosionproof operator will be identified with electrical interface FN, FS, FT or FU in the 15-digit product code.

15-DIGIT PRODUCT CODE

E 262 K 232 **FN** V00 H1

- E – Thread connection
- 262 – Product series
- K – Revision letter
- 232 – Valves version
- **FN** – **Electrical interface**
  - **FN** = NF
  - **FS** = WSNF
  - **FT** = NFET
  - **FU** = WSNFET
- V00 – Options
- H1 – Voltage - class

00130GB-2018/R01
Availability, design and specifications are subject to change without notice. All rights reserved.

BCAE Automation Solutions
青岛秉诚自动化设备有限公司
地址：中国·青岛市重庆南路99号海尔云街甲3号楼7F
服务热线：4006-918-365
网址：http://www.ivalve.cc
传真：(86-532)585-10-365
Email：sales@bechinas.com

OPTIONS

- Operators for mining, I M2 Ex d I, contact us

ORDERING EXAMPLES:

NF	B	327 B 001		230V / 50 Hz
NF	G	551 B 405		230V / 50 Hz
NFET	G	327 B 001	V	230V / 50 Hz
WSNF	E	272 A 047	MS	24V / DC
WSNF	B	320 A 184	E	24V / DC

prefix
pipe thread
basic number
suffix
voltage

MOUNTING BRACKET

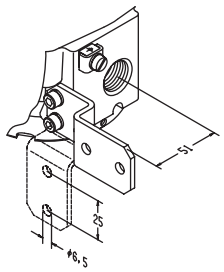

Bracket kit no. **C139824**
contains: Stainless steel 304 SS screws and bracket

15-DIGIT PRODUCT CODE

E	262	K	232	**FN**	V00	H1
E	262	K	232	**FS**	V00	F8
E	262	K	232	**FT**	V00	FT
E	262	K	232	**FU**	V00	H9

Thread connection
Product series
Revision letter
Valves version
Electrical interface
Options
Voltage - class

CONNECTIONS

- Any ATEX approved cable entry device can be fitted in the 1/2 NPT threaded entry hole (M20 x 1.5 in option). Refer to the nameplate for identification of the maximum cable temperature
- Internal and external earthing connection
- The operator can be rotated through 360° to select the most favourable position for cable entry

DIMENSIONS (mm), WEIGHT (kg)

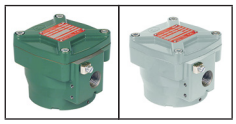

TYPE NF-WSNF

Prefix "NF" , "WSNF" Solenoid / Electrical interface FN/FS/FT/FU
Aluminium, stainless steel
(NF, epoxy coated)
EN-IEC 60079-1 and EN-IEC 60079-31
II 2G Ex db IIC Gb, II 2D Ex tb IIIC Db IP66/67

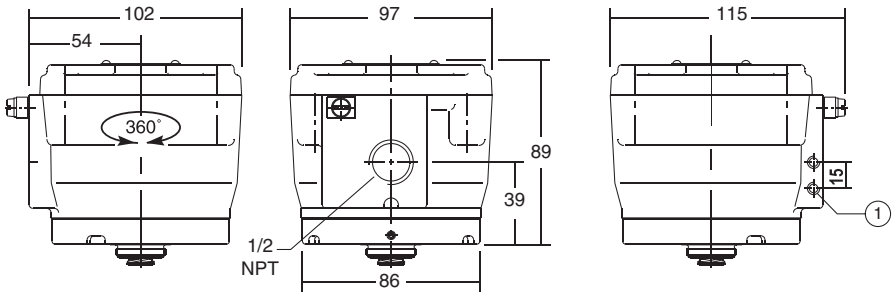

series	weight
NF	1,4
WSNF	2,7

(1) 2 mounting holes M5, depth 9 mm

00130GB-2018/R01
Availability, design and specifications are subject to change without notice. All rights reserved.

BCAE Automation Solutions
青岛秉诚自动化设备有限公司
地址：中国·青岛市重庆南路99号海尔云街甲3号楼7F
服务热线：4006-918-365
网址：http://www.ivalve.cc
传真：(86-532)585-10-365
Email：sales@bechinas.com

SOLENOID VALVES

for potentially explosive atmospheres
flameproof enclosure
II2G Ex d IIB+H2 Gb T6..T4, II2D Ex tb IIIC Db IP66/IP67
aluminium enclosure, ISO 15218 (CNOMO, size 30) interface

NC

3/2
Series
314

FEATURES

- *Explosionproof operator for use in potentially explosive atmospheres according to ATEX-Directive 2014/34/EU*
  EC type examination certificate no.: ***LCIE 10 ATEX 3043X***
  IECEx Certificate of Conformity no.: ***IECEx LCI 10.0010X***
- *Compliance with the Essential Health and Safety Requirements has been assured by compliance with the International and European Standards IEC and EN: 60079-0, 60079-1 and 60079-31*
- *Easy electrical installation by means of a screw terminal coil*
- *Enclosure provided with a 1/2 NPT threaded entry hole for a broad range of cable entries*
- *A wide range of valves can be supplied with the CNOMO size 30 solenoid pilot interface*

GENERAL

Differential pressure	See «SPECIFICATIONS» [1 bar =100 kPa]
Flow	See «SPECIFICATIONS»
Pneumatic base	ISO 15218 (CNOMO E06.05.80, size 30)
Response time	70 - 140 ms

fluids (∗)	temperature range (TS)	seal materials (∗)
air or inert gas	- 25°C to +60°C	NBR (nitrile) FPM (fluoroelastomer) VMQ (silicone)

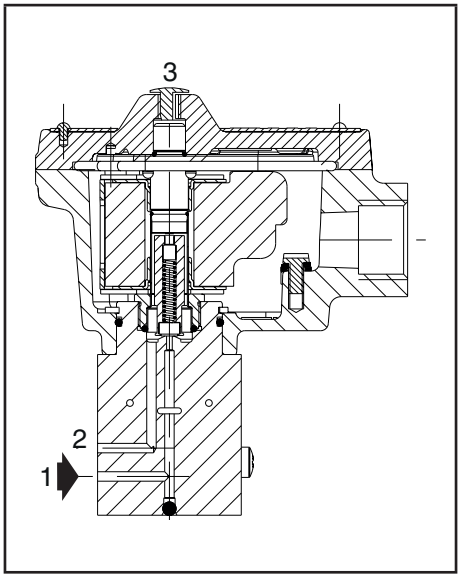

GENERAL

Solenoid enclosure	Aluminium, cataphorese black painting
Cover screws	Stainless steel
Nameplate	Aluminium

MATERIALS IN CONTACT WITH FLUID (∗) Ensure that the compatibility of the fluids in contact with the materials is verified	
Body	Aluminium, black painting
Core, core tube and plugnut	Stainless steel
Springs	Stainless steel
Seals	VMQ
Upper disc	FPM
Lower disc	NBR

SAFETY CODE

Gas	II2G Ex d IIB+H2 Gb T6..T4
Dust	II2D Ex tb IIIC Db T85°C...T135°C IP66/IP67

ELECTRICAL CHARACTERISTICS

Coil insulation class	F
Coil connection	Embedded screw terminals
Electrical enclosure protection	IP67 (EN 60529)
Standard voltages	DC (=) : 24V - 48V
(Other voltages on request)	AC (~) : 24V - 48V - 115V - 230V/50-60 Hz

TEMPERATURE CLASSIFICATION TABLES

AC solenoids (~)

Un (V)	Pn (2)(3) (watt)	solenoid size M6	maximum ambient °C (1) (4) surface temperature T6 85°C	T5 100°C	T4 135°C
	insulation class F (155°C) 100% E.D.				
24	5,4	●	40	-	60
48	5,8	●	40	-	60
115	7,1	●	-	40	60
230	7,4	●	-	40	60

DC solenoids (=)

Un (V)	Pn (watt) hot/cold		solenoid size M6	maximum ambient °C (1) (4) surface temperature T6 85°C	T5 100°C	T4 135°C
	insulation class F (155°C) 100% E.D.					
24	5,9	7,5 (3)	●	-	40	60
48	6	7,6 (3)	●	-	40	60

(1) **The minimum allowable ambient temperature is -25°C for the operator.** Actual temperature range can be limited depending on valve operation limits.
(2) Rectified coil construction.
(3) Maximum cold wattage.
(4) For the layout of the control circuit, see the installation and maintenance instructions at: www.asco.com

01036GB-2017/R01
Availability, design and specifications are subject to change without notice. All rights reserved.

BCAE Automation Solutions
青岛秉诚自动化设备有限公司
地址：中国·青岛市重庆南路99号海尔云街甲3号楼7F
服务热线：4006-918-365
网址：http://www.ivalve.cc
传真：(86-532)585-10-365
Email：sales@bechinas.com

SPECIFICATIONS

pipe size	orifice size	flow coefficient Kv 1→2		flow coefficient Kv 2→3		operating pressure differential (bar) min.	max. (PS) air, inert gas (✳)		thread type	dimensions / type [1]	15-DIGIT PRODUCT CODE brass	voltage code 24 V/50 Hz	48 V/50 Hz	115 V/50 Hz	230 V/50 Hz	24 V/DC	48 V/DC
	(mm)	(m³/h)	(l/min)	(m³/h)	(l/min)		~	=									
WITHOUT MANUAL OPERATOR																	
NC - Normally closed, NBR seal and disc																	
1/4	1,6	0,08	1,3	0,05	0,8	0	10	10	pad mount	01	**R314K311GNN00**	**FQ**	**FS**	**FC**	**FH**	**F1**	**F9**
WITH MAINTAINED MANUAL OPERATOR																	
NC - Normally closed, NBR seal and disc																	
1/4	1,6	0,08	1,3	0,05	0,8	0	10	10	pad mount	01	**R314K311GNN01**	**FQ**	**FS**	**FC**	**FH**	**F1**	**F9**

[1] For dimensions, see drawing(s) for each construction type on the following page(s).

(✳) Ensure that the compatibility of the fluids in contact with the materials is verified.

15-DIGIT PRODUCT CODE

R 314 K 311 GN N00 F1

Connection
R = Pad mount

Product series
314

Revision letter
K = Initial release

Valves version
311 = ISO 15218 (CNOMO E06.05.80, size 30)
1,6 mm orifice size / LPKF

Voltage - class
FQ = 24 V / 50-60 Hz - class F
FS = 48 V / 50-60 Hz - class F
FC = 115 V / 50-60 Hz - class F
FH = 230 V / 50-60 Hz - class F
F1 = 24 V DC - class F
F9 = 48 V DC - class F

Options
Without manual operator
N00 = NBR disc and seals

With maintained manual operator
N01 = NBR disc and seals

Electrical interface
Standard
GN = 1/2 NPT female thread cable entry screw terminal
Option
GT = M20 x 1,5 female thread cable entry screw terminal

INSTALLATION

- The solenoid valves can be mounted in any position without affecting operation
- The solenoid valves are supplied with mounting screws
- Mounting on valve or single, non-joinable subbase with ISO 15218 (CNOMO, size 30) interface
- Installation/maintenance instructions are included with each valve

OPERATOR CONNECTION

- Any ATEX approved cable entry device can be fitted in the 1/2" NPT threaded entry hole (M20 x 1.5, in option); supplied without cable gland
- Internal and external earthing connection
- The operator can be rotated through 360° to select the most favourable position for cable entry

DIMENSIONS (mm), WEIGHT (kg)

TYPE 01

Electrical interface "GN"
IEC, EN: 60079-1, 61241-1
II2G Ex d IIB+H2 Gb T6..T4
II2D Ex tb IIIC Db IP66/IP67 T85°C..T135°C

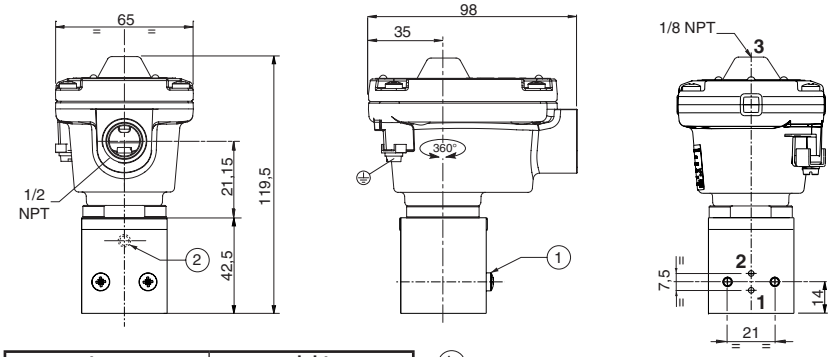

type	weight [2]
01	0,7

[2] Without cable gland.

(1) Mounting: two screws M4 x 35
(2) Manual operator location

All leaflets are available on: **www.asco.com**

BCAE Automation Solutions
青岛秉诚自动化设备有限公司
地址：中国·青岛市重庆南路99号海尔云街甲3号楼7F
服务热线：4006-918-365
网址：http://www.ivalve.cc
传真：(86-532)585-10-365
Email：sales@bechinas.com

01036GB-2017/R01
Availability, design and specifications are subject to change without notice. All rights reserved.

OPERATORS

for potentially explosive atmospheres encapsulated, II 2G Ex **mb** IIC T5..T3 Gb / II 2D Ex **mb** IIIC T100°C..T200°C Db IP67 moulded enclosure with integrated cable

Series **PV**

FEATURES

- *Explosionproof operator for use in potentially explosive atmospheres according to ATEX-Directive 2014/34/EU*
  *EC type examination certificate no.: **BAS 98 ATEX 2168 X***
  *IECEx Certificate of Conformity no.: **IECEx SIR 06.109X***
- *Compliance with the Essential Health and Safety Requirements has been assured by compliance with the International and European Standards EN-IEC 60079-0 and EN-IEC 60079-18*
- *Easy electrical installation with moulded-in supply cable, 2 m long*
- *Ingress protection degree IP67*
- *The operators are designed for installation on a wide range of valves*

CONSTRUCTION

Solenoid enclosure	Epoxy encapsulated
Core tube	Stainless steel
Plugnut	Stainless steel
Shading coil	Copper or silver
Nameplate	Polyester
Safety code	IECEx / Ex II 2G Ex mb IIC T5..T3 Gb IECEx / Ex II 2D Ex mb IIIC 100°C ..200°C Db IP67

ELECTRICAL CHARACTERISTICS

Standard voltages	DC (=) : 24V - 48V
(Other voltages and 60 Hz on request)	AC (~) : 24V - 48V - 115V - 230V / 50 Hz

TEMPERATURE CLASSIFICATION TABLES

AC solenoids (~)

Pn (watt)	solenoid size EM5	EMXX			maximum ambient °C (1) surface temperature T6 85°C	T5 100°C	T4 135°C	T3 200°C
insulation class F (155°C) 100% E.D.								
2,5	●				-	-	60	65
4,0 (2)	●				-	-	60	65
4,05		●			-	-	-	65
6,3 (3)	●				-	-	-	65
10,5		●			-	-	-	65
insulation class F (155°C) 10% E.D.								
10,0	●				-	-	-	65

DC solenoids (=)

Pn (watt)	solenoid size EM5	EMXX			maximum ambient °C (1) surface temperature T6 85°C	T5 100°C	T4 135°C	T3 200°C
insulation class F (155°C) 100% E.D.								
1,7		●			65	-	-	-
3,0 (4)	●				-	40	60	60
6,9 (5)	●				-	-	-	40
11,2		●			-	-	65	70
19,7		●			-	-	40	70
insulation class F (155°C) 10% E.D.								
15,0	●				-	-	-	40
22,0	●				-	-	-	40

Check the wattage compatibility with the product selected.

(1) **Allowable minimum ambient temperature: -40°C.** Actual temperature range may be limited depending on valve operation limits.

(2) AC series 189 - 189 banjo - 256/356 (1/8-1/4) - 551 integrated pilot - 238 (3/8 to 1)

(3) AC series 552/553

(4) DC series 189 - 189 banjo - 551 integrated pilot

(5) DC series 552 - 553 - 256/356 1/8-1/4 - 238 (3/8 to 1)

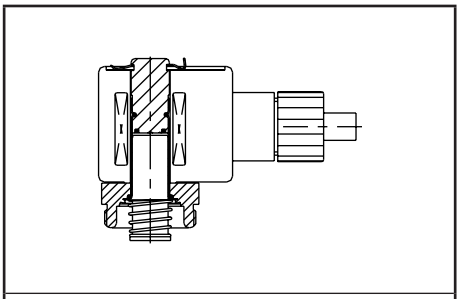

EM5

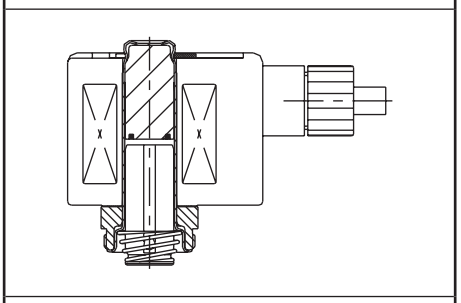

EMXX

CONNECTIONS

- The solenoid can be rotated through 360° to select the most favourable position for the cable.

ORDERING INFORMATION ON EXCEPTIONS

- **PV** + 18901... , for series: 189 - 189 banjo

Example:

PV	18901001	230V/50 Hz
PV	18901010	24V/DC
PV	18901032	230V/50 Hz
PV	18901047	24V/DC

- **PV** + TPL number 20787 , for series: 551 integrated pilot - 238 (floating diaphragm, 3/8 to 1, catalogue nos. including the letter ....D...) - 256/356 1/8

Example:

PVX	G551A005	24V/DC	**20787**
PVX	G551A006	48V/DC	**20787**
PVX	G551A017	24V/50 Hz	**20787**
PVX	G551A018	48V/50 Hz	**20787**
PVX	G551A001	115V/50 Hz	**20787**
PVX	E238D001	230V/50 Hz	**20787**
PVX	E238D008	24V/DC	**20787**
PVX	G256A002VMS	24V/DC	**20787**
PVX	G356A002VMS	230V/50 Hz	**20787**

ORDERING INFORMATION

(See Ordering Information on Exceptions)

A valve with the explosionproof operator will be identified with the prefix PV before the catalogue number.

Example: **PV** E 210D095 230V/50 Hz

solenoid operator — pipe thread — basic number — voltage

A valve supplied with the explosionproof operator will be identified with electrical interface A7 in the 15-digit product code.

15-DIGIT PRODUCT CODE

E 262 K 232 **A7** V00 H1

Thread connection — Product series — Revision letter — Valves version — **Electrical interface** — Options — Voltage - class

A7 = PV

All leaflets are available on: **www.asco.com**

00133GB-2017/R01
Availability, design and specifications are subject to change without notice. All rights reserved.

BCAE Automation Solutions
青岛秉诚自动化设备有限公司
地址：中国·青岛市重庆南路99号海尔云街甲3号楼7F
服务热线：4006-918-365
网址：http://www.ivalve.cc
传真：(86-532)585-10-365
Email：sales@bechinas.com

ORDERING EXAMPLES:

15-DIGIT PRODUCT CODE

E 262 K 232 **A7** V00 F8
E 262 K 232 **A7** V00 H9

- Thread connection
- Product series
- Revision letter
- Valves version
- Electrical interface
- Options
- Voltage - class

DIMENSIONS (mm), WEIGHT

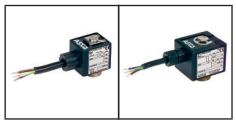

TYPE PV
Prefix "PV" solenoids / Electrical interface A7
Epoxy coated
EN-IEC 60079-18
II 2G Ex mb IIC Gb - II 2D Ex mb IIIC Db IP67

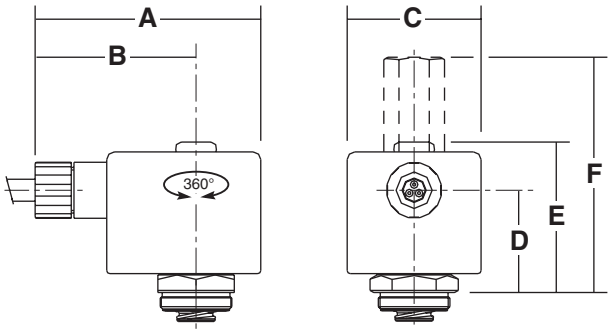

size	A	B	C	D	E	F	weight (1)
EM5	60	45	29	21	38,5	66	0,113
EMXX	75	53,5	44,5	33,6	49,4	77,3	0,348

00133GB-2017/R01
Availability, design and specifications are subject to change without notice. All rights reserved.

BCAE Automation Solutions
青岛秉诚自动化设备有限公司
地址：中国·青岛市重庆南路99号海尔云街甲3号楼7F
服务热线：4006-918-365
网址：http://www.ivalve.cc
传真：(86-532)585-10-365
Email：sales@bechinas.com

OPERATORS

for potentially explosive atmospheres
increased safety/encapsulation
II 2G Ex e mb IIC T4 Gb, II 2D Ex tb IIIC T135°C Db IP67
moulded enclosure

Series
WBLP

FEATURES

- *Explosionproof operator for use in potentially explosive atmospheres according to ATEX-Directive 2014/34/EU*
  EC type examination certificate no.: ***LCIE 12 ATEX 3005 X***
  IECEx Certificate of Conformity no.: ***IECEx LCI 12.0002X***
- *Compliance with the Essential Health and Safety Requirements has been assured by compliance with the International and European Standards EN-IEC 60079-0, EN-IEC 60079-7, EN-IEC 60079-18 and EN-IEC 60079-31*
- *Easy electrical installation by means of a screw terminal coil*
- *Peak voltage suppression standard for DC executions*
- *The coil winding is fitted with a thermal fuse (in AC/DC) which will trip in case of excessive temperature due to prolonged overvoltage or a blocked core and cause the valve to de-energise and fail-safe*
- *Enclosure provided with integral strain relief for cable with an O.D. of 7 to 8,5 mm*
- *Ingress protection degree IP67*
- *A wide range of valves can be supplied with the operator*

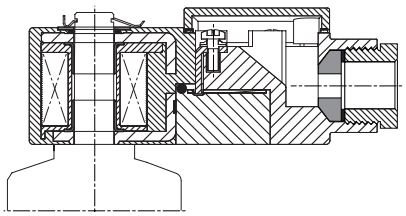

CONSTRUCTION

Solenoid enclosure	PBT
Cable gland	PA 66, M20 x 1,5
Nameplate	Polyester
Coil connection	Embedded screw terminals
Safety code	II 2G Ex e mb IIC T4 Gb II 2D Ex tb IIIC T 135°C Db IP67

ELECTRICAL CHARACTERISTICS

Standard voltages	DC (=) : 24V - 48V AC (~) : 24V - 48V - 115V - 230V / 50 Hz

TEMPERATURE CLASSIFICATION TABLES

AC (~) solenoids

Pn (watt)	solenoid size WBLP				maximum ambient °C (1) surface temperature T4 135°C
insulation class F (155°C) 100% E.D.					
3,5 (2)	●				65

DC (=) solenoids

Pn (watt)	solenoid size WBLP				maximum ambient °C (1) surface temperature T4 135°C
insulation class F (155°C) 100% E.D.					
4	●				65

Check the wattage compatibility with the product selected.

(1) **The minimum allowable ambient temperature is -40°C for the operator.** Actual temperature range can be limited depending on valve operation limits.

CONNECTIONS

- Internal and external earthing connection
- The operator can be rotated through 360° to select the most favourable position for cable entry

ORDERING INFORMATION

A valve supplied with the explosionproof operator will be identified with prefix WBLP before the catalogue number.

Example:

WBLP G 551A005 230V/50 Hz
WBLP G 553A005 230V/50 Hz

operator — pipe thread — basic number — voltage

01013GB-2017/R01
Availability, design and specifications are subject to change without notice. All rights reserved.

BCAE Automation Solutions
青岛秉诚自动化设备有限公司
地址：中国·青岛市重庆南路99号海尔云街甲3号楼7F
服务热线：4006-918-365
网址：http://www.ivalve.cc
传真：(86-532)585-10-365
Email：sales@bechinas.com

DIMENSIONS (mm), WEIGHT (kg)

TYPE WBLP

Prefix "WBLP" solenoids
EN-IEC 60079-7, EN-IEC 60079-18 and EN-IEC 60079-31
II 2G Ex e mb IIC T4 Gb, II 2D Ex tb IIIC T135°C Db IP67

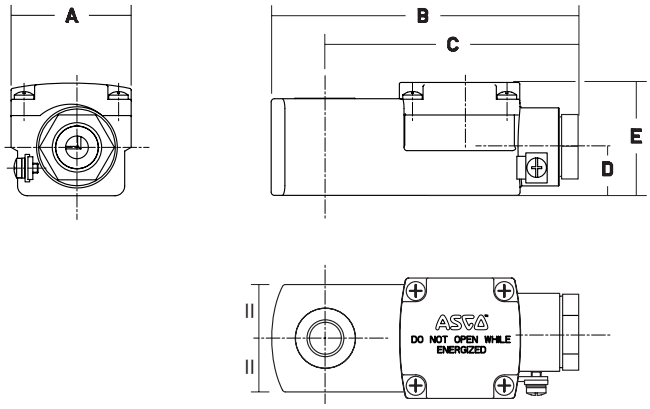

prefix	A	B	C	D	E	weight
WBLP	37	98	81,5	15	35,2	0,18

ACCESSORIES

Supply rail with pressure isolation valves
Aluminium
Inlet G 1/2, outlets G 1/4

	supply rail for «n» valves with end pieces and low 65 mm mounting brackets					
number of outlets	4	6	8	10	12	15
catalogue number	88100970	88100971	(1)	(1)	(1)	(1)
L (mm)	177	259	341	423	505	628

(1) Contact us.

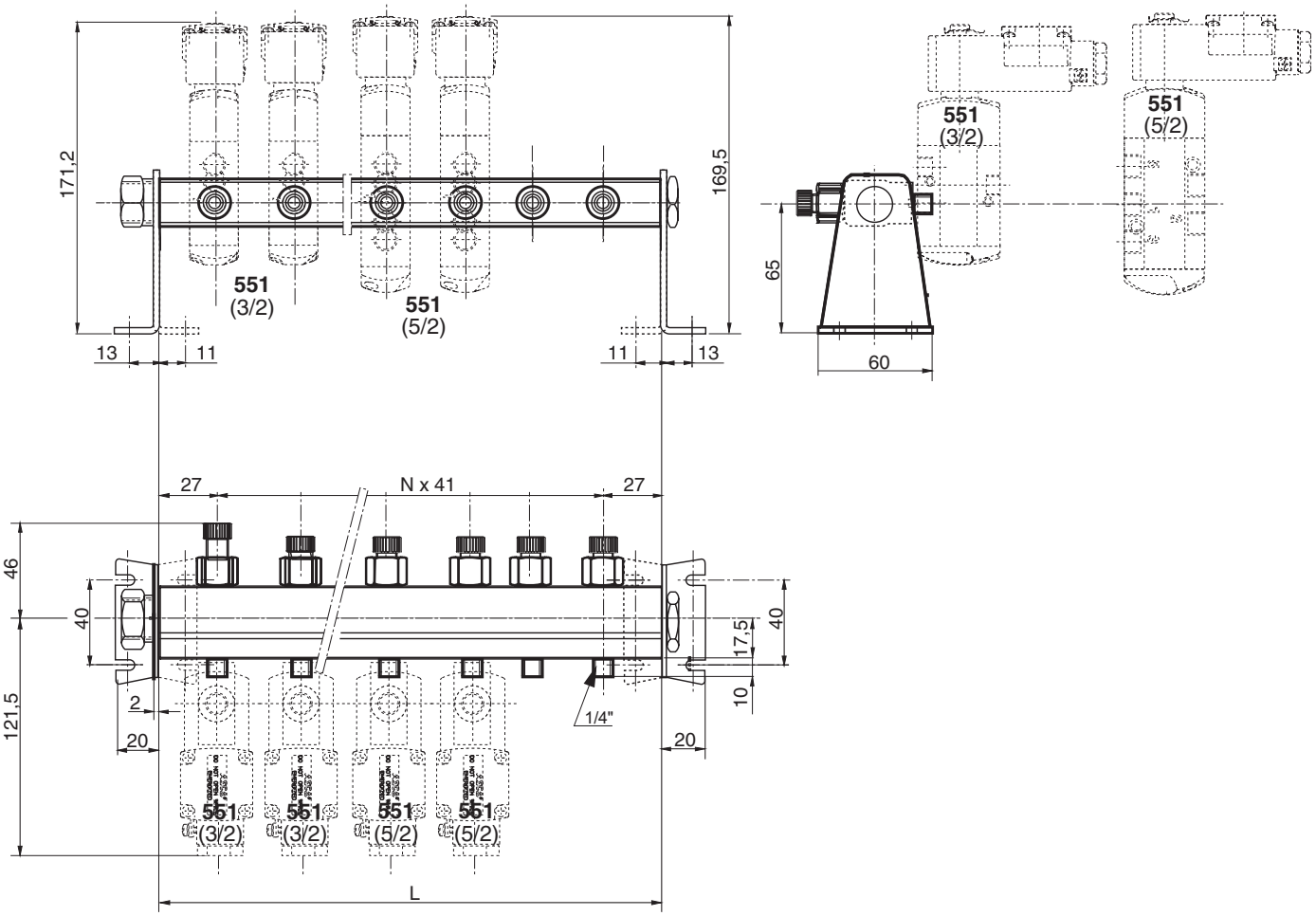

01013GB-2017/R01
Availability, design and specifications are subject to change without notice. All rights reserved.

BCAE Automation Solutions
青岛莱诚自动化设备有限公司
地址：中国·青岛市重庆南路99号海尔云街甲3号楼7F
服务热线：4006-918-365
网址：http://www.ivalve.cc
传真：(86-532)585-10-365
Email：sales@bechinas.com

OPERATORS

for potentially explosive atmospheres
increased safety/encapsulation
II2 G Ex **e mb** II T6..T3 Gb, II2 D Ex **tb** IIIC T85°C..
T200°C Db IP66/67, steel or stainless steel enclosure

Series
EM
WSEM

FEATURES

- *Explosionproof operator for use in potentially explosive atmospheres according to ATEX-Directive 2014/34/EU*
  *EC type examination certificate no.: **KEMA 98 ATEX 2542 X***
  *IECEx Certificate of Conformity no.: **IECEx KEM 08.0002X***
- *Compliance with the Essential Health and Safety Requirements has been assured by compliance with the International and European Standards EN-IEC 60079-0, EN-IEC 60079-7, EN-IEC 60079-18 and EN-IEC 60079-31*
- *Easy electrical installation by means of a screw terminal coil*
- *Peak voltage suppression standard for DC executions*
- *Enclosure provided with integral strain relief for cable with an o.d. of 7 to 12 mm*
- *Ingress protection degree IP66/67*
- *A wide range of valves can be supplied with the operator*

CONSTRUCTION

Solenoid enclosure	EM	Zinc plated steel (epoxy coated)
	WSEM	Stainless steel, AISI 316
Cable gland		PA, M20 x 1,5
Core, core tube and plugnut		Stainless steel
Shading coil		Copper or silver
Nameplate		Polyester
Coil connection		Embedded screw terminals
Safety code		II 2G Ex e mb IIC T6..T3 Gb II 2D Ex tb IIIC 85°C..200°C Db IP66/67

ELECTRICAL CHARACTERISTICS

Standard voltages	DC (=) : 24V - 48V
(Other voltages and 60 Hz on request)	AC (~) : 24V - 48V - 115V - 230V / 50 Hz

TEMPERATURE CLASSIFICATION TABLES

AC (~) solenoids

Pn (watt)	solenoid size M6	MXX	M12		maximum ambient °C [1] surface temperature T6 85°C	T5 100°C	T4 135°C	T3 200°C
insulation class F (155°C) 100% E.D.								
1,2 [2]			●		60	75		
1,5 [2]		●			40	55		
1,85 [2]			●		40	55		
3,7 [2]			●		40	55	75	
5,8 [2]			●			40	75	-
6,0	●							40
9,0	●							40
10,0 [2]		●						40
10,0 [2]			●				40	65
10,5		●						40
13,0		●						40
13,6 [2]			●					40
14,1 [2]			●					40
16,5			●					40

DC (=) solenoids

Pn (watt)	solenoid size M6	MXX	M12		maximum ambient °C [1] surface temperature T6 85°C	T5 100°C	T4 135°C	T3 200°C
insulation class F (155°C) 100% E.D.								
1,3			●		60	75		
1,7		●			40	55		
1,8			●		40	55		
3,6			●		40	55	75	
5,7			●			40	75	-
9,7	●							40
10,0			●				40	65
11,2		●						40
14,0			●					40
15,3	●							40
16,8			●					40
19,7			●					40

Check the wattage compatibility with the product selected.

[1] **The minimum allowable ambient temperature is -40°C for the operator.** Actual temperature range can be limited depending on valve operation limits.

[2] AC (~): rectified coil construction.

CONNECTIONS

- Internal and external earthing connection
- The operator can be rotated through 360° to select the most favourable position for cable entry

OPTIONS

- Brass nickel plated or stainless steel cable gland
- Conduit hub, 1/2 NPT, M20 x 1,5, 3/4 NPT or M25 x 1,5 in aluminium or stainless steel
- Special moulded-in solid state components for peak voltage suppression and/or rectification (four-diode bridge)

EM

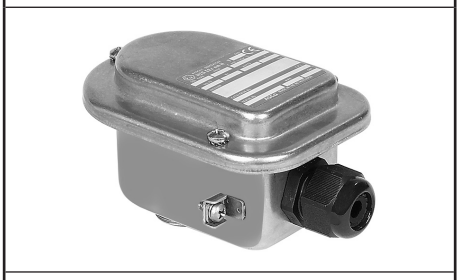

WSEM

ORDERING INFORMATION

A valve supplied with the explosionproof operator will be identified with prefix EM or WSEM before the catalogue number.

Example: **WSEM** E 210D095 230V/50 Hz
EM E 210D095 230V/50 Hz

operator — pipe thread — basic number — voltage

A valve supplied with the explosionproof operator will be identified with electrical interface MV, MW, MT, MS, MN or MU in the 15-digit product code.

15-DIGIT PRODUCT CODE

E 262 K 232 **MV** V00 H1

- E: Thread connection
- 262: Product series
- K: Revision letter
- 232: Valves version
- **MV**: Electrical interface
- V00: Options
- H1: Voltage-class

Electrical interface
MV = EM
MW = WSEM
MT = EMET
MS = WSEMT
MN = EMT
MU = WSEMET

All leaflets are available on: **www.asco.com**

00135GB-2017/R01
Availability, design and specifications are subject to change without notice. All rights reserved.

BCAE Automation Solutions
青岛秉诚自动化设备有限公司
地址：中国·青岛市重庆南路99号海尔云街甲3号楼7F
服务热线：4006-918-365
网址：http://www.ivalve.cc
传真：(86-532)585-10-365
Email：sales@bechinas.com

ORDERING EXAMPLES:

15-DIGIT PRODUCT CODE

E	262	K	232	**MV**	V00	H1
E	262	K	232	**MW**	V00	F8
E	262	K	232	**MT**	V00	FT
E	262	K	232	**MS**	V00	FT
E	262	K	232	**MN**	V00	FT
E	262	K	232	**MU**	V00	H9

Thread connection
Product series
Revision letter
Valves version
Electrical interface
Options
Voltage - class

DIMENSIONS (mm), WEIGHT (kg)

TYPE EM/WSEM

Prefix "EM"/"WSEM" solenoids / Electrical interface MV/MW/MT/MS/MN/MU
Pull-type solenoid operator
Metal enclosure, epoxy coated or stainless steel
EN-IEC 60079-7, EN-IEC 60079-18 and EN-IEC 60079-31
II 2G Ex e mb IIC Gb, II 2D Ex tb IIIC Db IP66/67

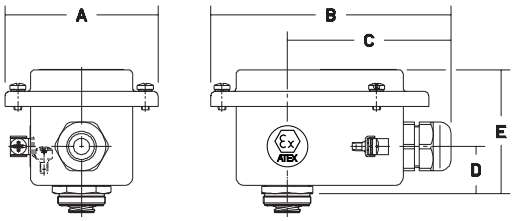

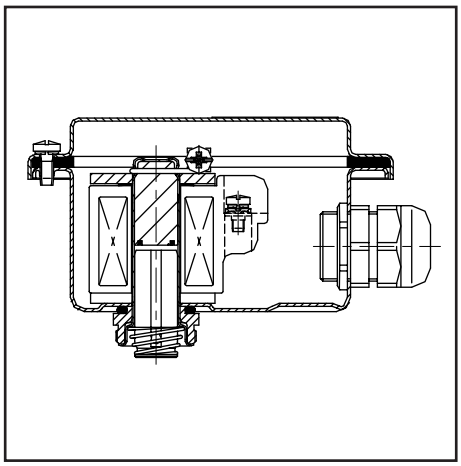

series/size	A	B	C	D	E	weight
EM/WSEM-M6	77	120	82	26	64	0,48
EM/WSEM-MXX	77	120	82	23	62	0,55
EM/WSEM-M12	77	120	82	21	65	0,67

TYPE EM/WSEM

Prefix "EM"/"WSEM" solenoids / Electrical interface MV/MW/MT/MS/MN/MU
Push-type solenoid operator
Metal enclosure, epoxy coated or stainless steel
EN-IEC 60079-7, EN-IEC 60079-18 and EN-IEC 60079-31
II 2G Ex e mb IIC Gb, II 2D Ex tb IIIC Db IP66/67

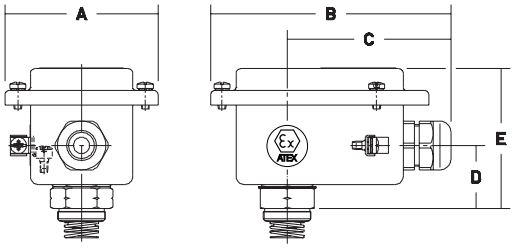

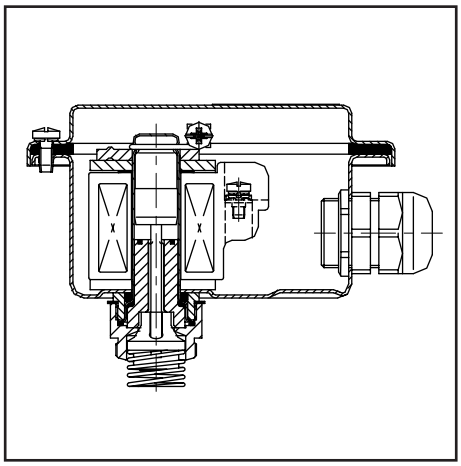

series/size	A	B	C	D	E	weight
EM/WSEM-M6	77	120	82	25	63	0,50
EM/WSEM-MXX	77	120	82	31	69	0,59
EM/WSEM-M12	77	120	82	30	73	0,70

TYPE EM/WSEM

Prefix "EM"/"WSEM" solenoids / Electrical interface MV/MW/MT/MS/MN/MU
Pull-type solenoid operator
Metal enclosure, epoxy coated or stainless steel
EN-IEC 60079-7, EN-IEC 60079-18 and EN-IEC 60079-31
II 2G Ex e mb IIC Gb, II 2D Ex tb IIIC Db IP66/67

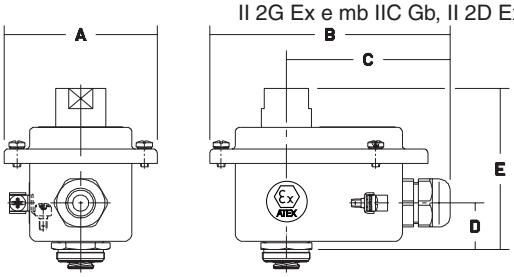

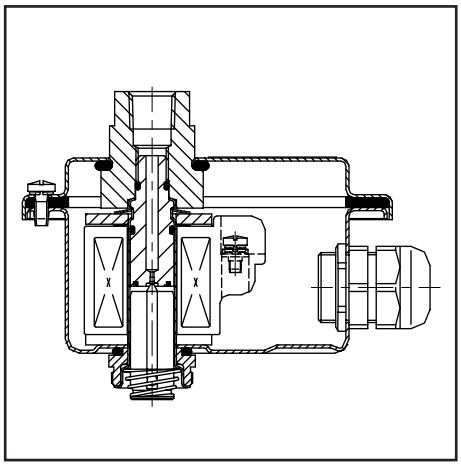

series/size	A	B	C	D	E	weight
EM/WSEM-MXX	77	120	82	23	80	0,68

All leaflets are available on: **www.asco.com**

BCAE Automation Solutions
青岛莱诚自动化设备有限公司
地址：中国·青岛市重庆南路99号海尔云街甲3号楼7F
服务热线：4006-918-365
网址：http://www.ivalve.cc
传真：(86-532)585-10-365
Email：sales@bechinas.com

00135GB-2017/R01
Availability, design and specifications are subject to change without notice. All rights reserved.

OPERATORS

intrinsically safe

II 1G Ex ia IIC T6 Ga, II 2D Ex tb IIIC T85°C IP66/IP67 Db

aluminium or stainless steel enclosure

Series
LI
WSLI

FEATURES

- *Explosionproof operator for use in potentially explosive atmospheres according to ATEX-Directive 2014/34/EU*
  EC type examination certificate no.: ***LCIE 09 ATEX 3054 X***
  IECEx Certificate of Conformity no.: ***IECEx LCI 09.0022X***
- *Compliance with the Essential Health and Safety Requirements has been assured by compliance with the International and European Standards IEC and EN: 60079-0, 60079-11 and 60079-31*
- *Easy electrical installation by means of a screw terminal coil*
- *Enclosure provided with a cable gland for unarmoured cable with an o.d. of 6 to 12 mm*
- *Ingress protection degree IP67*
- *For solenoid operator type WSLI for use in mines susceptible to firedamp, group I: see "Options"*
- *A wide range of valves can be supplied with the operator*

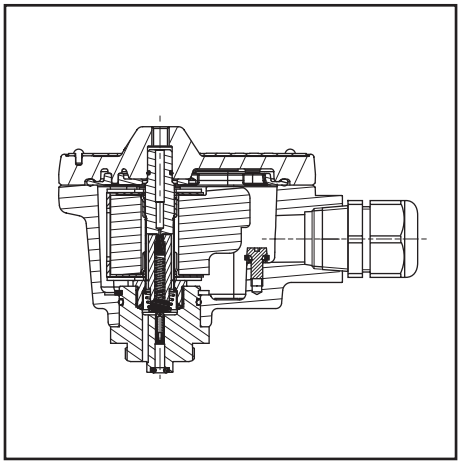

CONSTRUCTION

Solenoid enclosure	LI	Aluminium, cataphorese black painting
	WSLI	Stainless steel (AISI 316L)
Bonnet	LI	Stainless steel
	WSLI	Stainless steel (AISI 316L)
Cover screws		Stainless steel
Core, core tube and plugnut		Stainless steel
Seals		VMQ
Upper disc		FPM
Lower disc		NBR
Nameplate		Stainless steel
Coil connection		Embedded screw terminals
Cable gland		Polyamide (PA), 1/2 NPT (cable Ø 7-12 mm)
Safety code	LI [1] / WSLI [1]	Ex II 1G Ex ia IIC T6 Ga
		Ex II 2D Ex tb IIIC T85°C IP66/IP67 Db

⚠ [1] **For use in zone 0 locations, see the installation conditions given in the I&M instructions.**

ELECTRICAL CHARACTERISTICS

Coil insulation class F

Standard voltages DC (=) : 24V

voltage (U_n) (max. ripple 10%)	power ratings (Pn)	typical functional ratings		R		operator ambient temperature range (TS)	type [4]
	hot/cold =	$I_{(ON)}$ min.	$U_{(ON)}$ min.	20°C	max. T6		
(V)	(W)	(mA)	(V)	(Ω)	(Ω)	(°C) [2]	
24	0,5	32	12,5	288	354	-40 to +60	01

Pn	safety parameters				
	U_i = (DC)	I_i	P_i	L_i	C_i
(W)	(V)	(mA)	(W)	(H)	(µF)
0,5	32	500	1,5	0	0

safe area (RS interface) **explosive area**

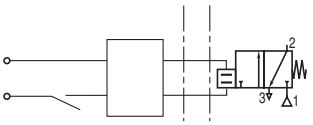

Example of use with a Zener barrier installed in a non-hazardous zone

ORDERING INFORMATION

A valve supplied with the intrinsically safe operator will be identified with prefix LI or WSLI before the catalogue number.

Example: LI G 551A307 24V/DC

operator — pipe thread — basic number — voltage

TEMPERATURE CLASSIFICATION TABLES

DC (=) solenoids

Pn (watt)	solenoid size				maximum ambient °C [2] surface temperature
			M6		T6 85°C
insulation class F (155°C) 100% E.D. [3]					
0,5			●		60

Check the wattage compatibility with the product selected.

[2] **The minimum allowable ambient temperature is -40°C for the operator.** Actual temperature range can be limited depending on valve operation limits. **-35°C max. with polyamide cable gland.**

[3] This intrinsically safe valve must be connected to a specific, approved power supply (safety barrier or interface) located in a safe area. See list of safety barriers/interfaces on page 2.

[4] Refer to the dimensional drawings on the following page.

CONNECTIONS

- Internal and external earthing connection
- The operator can be rotated through 360° to select the most favourable position for cable entry
- Electrical connection between solenoid valve and barrier/interface with cable type A or B according to EN 50039

01055GB-2017/R01
Availability, design and specifications are subject to change without notice. All rights reserved.

BCAE Automation Solutions
青岛秉诚自动化设备有限公司
地址：中国·青岛市重庆南路99号海尔云街甲3号楼7F
服务热线：4006-918-365
网址：http://www.ivalve.cc
传真：(86-532)585-10-365
Email：sales@bechinas.com

OPTIONS

- Cable glands (Nickel-plated brass): unarmoured cable, catalogue number **88200011** / armoured cable, catalogue number **88200014**

RECOMMENDED INTERFACES

Located in safe areas, these interfaces allow to feed the intrinsically safe solenoid valves located in explosive areas.
This equipment must be ordered from its respective manufacturers, specifying that they are intended to feed intrinsically safe solenoid operators:
LI / WSLI: II 1G Ex ia IIC T6 Ga, II 2D Ex tb IIIC T85°C IP66/IP67 Db

INTERFACES			
manufacturer	**module type**		**1G/2G T6 IIC**
ABB	DO910S		x
Bartec	07-7331-2105/1000		x
	07-7331-2301/1100		x
GEORGIN	BXNE701002		x
	BXNE70100E		x
G.M. International	D1040Q-2	D1049S	x
	D1042Q-2	D5048S	x
	D1043Q-2	D5049S	x
	D1048S	-	x
MTL	MTL 722+	MTL 779	x
	MTL 728+	MTL 4524S	x
	MTL 728P+	-	x
Pepperl + Fuchs	KFD2-SL2-Ex1		x
	KFD2-SL2-Ex1.B		x
	KFD2-SL2-Ex1.LK		x
	KFD2-SL2-Ex2		x
	KFD2-SL2-Ex2.B		x
	KCD0-SD-Ex1.1245		x
	KFD0-SD2-Ex2.1245		x
	LB-2103	FB-2203	x
	LB-2105	FB-2205	x
	LB-2112	FB-2212	x
PHOENIX CONTACT	MACX MCR-EX-SD-24-48-LP(-SP)		x
	MACX MCR-EX-SD-21-60-LP(-SP)		x
	PI-EX-SD-24-48		x
	PI-EX-SD-21-60		x
Stahl	9475/12-04-11	9175/20-14-11	x
	9475/12-04-21	9176/10-14-00	x
	9475/12-04-31	9176/20-14-00	x
	9475/32-04-12	9175/10-16-11	x
	9475/32-04-22	9175/20-16-11	x
	9475/32-04-72	9176/10-16-00	x
	9175/10-14-11	9176/20-16-00	x
	9001/01-280-100-101		x
	9002/13-280-110-001		x

INTERFACES		
manufacturer	**module type**	**1G/2G T6 IIC**
Turck	MK72-S09-Ex0/24VDC	x
	MC72-41Ex-T/24VDC	x
	MC72-44Ex-T	x
Siemens	6ES7132-7RD11-0AB0 2 ways	x
	6ES7132-7RD21-0AB0	x
	6ES7132-7GD10-0AB0 2 ways	x
	6ES7132-7GD20-0AB0	x

ZENER BARRIERS		
Bartec	07-7331-2301/1001	x
CEAG	SB-3722	x
	SB-2420	x
	SB-3729	x
	SB-3728	x
	SB-0728	x
GEORGIN	BZG728+	x
	BZG2728+	x
	BZG728P+	x
	BZG2728P+	x
MTL	MTL 722 / MTL 728P	x
	MTL 728 / MTL 779	x
Pepperl + Fuchs	Z728	x
	Z728.H	x
	Z728.CL	x
Stahl	9001/01-199-150-101	x
	9001/01-280-085-101	x
	9001/01-280-100-101	x
	9001/01-280-110-101	x

In accordance with the zone classification and the national legislation of each country, apply the certification procedures for the connection of IS-rated products with associated equipment.
All information subject to change without notice. All responsibility for the use of products from other suppliers and the possible modifications of their characteristics is disclaimed.

DIMENSIONS (mm), WEIGHT (kg)

TYPE LI

Prefix "LI" Solenoid
Aluminium, cataphorese black painting
IEC and EN: 60079-11, 60079-31
II 1G Ex ia IIC T6 Ga, II 2D Ex tb IIIC T85°C IP66/IP67 Db

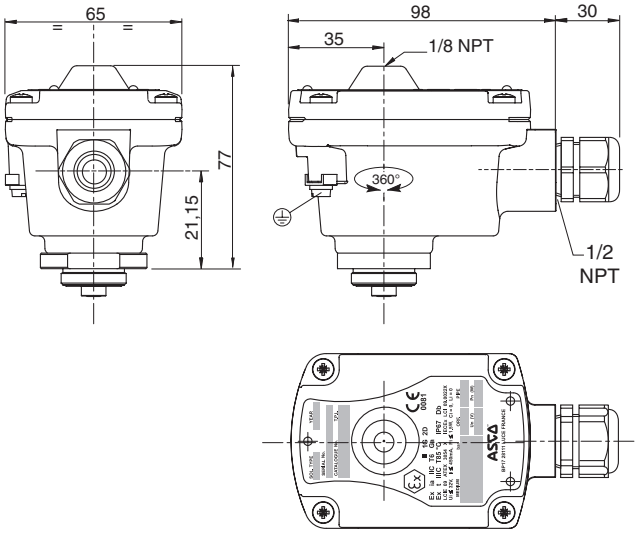

TYPE WSLI

Prefix "WSLI" Solenoid
Stainless steel
IEC and EN: 60079-11, 60079-31
II 1G Ex ia IIC T6 Ga, II 2D Ex tb IIIC T85°C IP66/IP67 Db

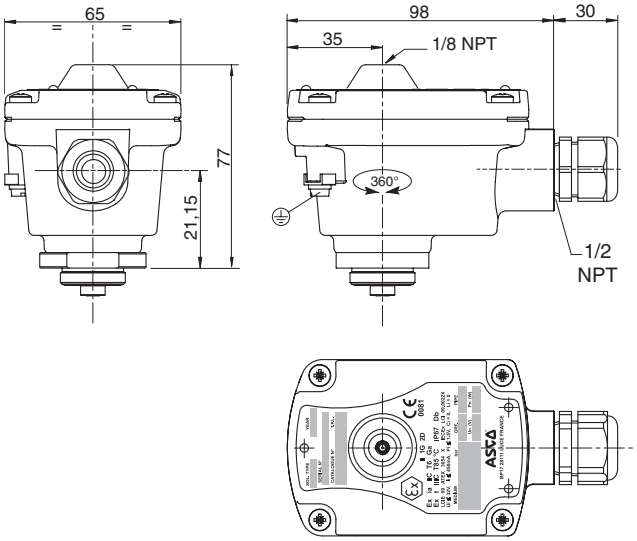

prefix	weight
LI	0,56
WSLI	1,17

All leaflets are available on: **www.asco.com**

BCAE Automation Solutions
青岛莱诚自动化设备有限公司
地址：中国·青岛市重庆南路99号海尔云街甲3号楼7F
服务热线：4006-918-365
网址：http://www.ivalve.cc
传真：(86-532)585-10-365
Email：sales@bechinas.com

01055GB-2017/R01
Availability, design and specifications are subject to change without notice. All rights reserved.

MINI-SOLENOID VALVES

intrinsically safe

II 1 G Ex ia IIC T6 to T4 Ga, II 1 D Ex ia IIIC T85°C to T135° IP65 Da

ISO 15218 (CNOMO, size 15) interface

direct operated, pad mounting body, connector size 15

NC

3/2 Series 302

FEATURES

- *Mini-low consumption valves (0,25 W/0,5 W) for use in potentially explosive atmospheres according to ATEX-Directive 2014/34/EU*
  EC type examination certificate no.: ***INERIS 03 ATEX 0249X***
  IECEx Certificate of Conformity no.: ***IECEx INE 10.0002X***
- *Compliance with the Essential Health and Safety Requirements has been assured by compliance with the International and European Standards IEC and EN: 60079-0, 60079-11 and 60079-26*
- *The valve's Ex ia protection allows it to be installed in explosive atmospheres up to zone 0 or 20. It can be used in the chemical, oil and pharmaceutical industries, or in processing and packaging plants for flammable products (paints, solvents)*
- *Compact, monobloc pilot valve with spade plug. Connection according to DIN 43650, form C, 9,4 mm pin spacing*
- *Version with integrated display and electrical protection. LED visible from 3 sides*

GENERAL

Differential pressure	0 - 8 bar [1 bar = 100 kPa]
Pneumatic base	ISO 15218 (CNOMO E06.36.120N, size 15)
Connection	Subbase
Response time	20 ms

fluids (∗)	temperature range (TS)	seal materials (∗)
air or inert gas filtered (50 µm), without condensate, dew point: -20°C	0°C to + 40°C (0,25 W)	NBR (nitrile) FPM (fluoroelastomer)
	- 10°C to + 40°C (0,5 W)	

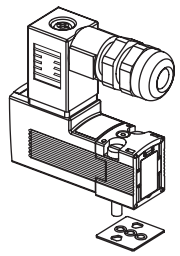

PNEUMATIC CNOMO interface

MATERIALS IN CONTACT WITH FLUID

(∗) Ensure that the compatibility of the fluids in contact with the materials is verified

Body	PARA
Internal parts	POM, PET, stainless steel and brass
Seals	NBR, FPM
Pneumatic interface seal	TPE

OTHER MATERIALS

Coil	Thermoplastic PET

ELECTRICAL CHARACTERISTICS

Coil insulation class	F

SAFETY CODE

II 1 G Ex ia IIC T6 to T4 Ga
II 1 D Ex ia IIIC T 85°C to T135°C IP65 Da

Connector	Spade plug (cable Ø 4-6 mm)
Connector specification	DIN 43650, 9,4 mm, form C
Electrical safety	IEC 335
Electrical enclosure protection	Moulded IP65 (EN 60529)
Standard voltages	DC (=) : 12V - 24V [2] (0,25 W = 24 V only)

voltage (U_n) (max. ripple 10%)	power ratings (Pn)(◊) hot/cold =	typical functional ratings: $I_{(ON)}$ min. with LED	$U_{(ON)}$ min.	$U_{(MAX)}$ recom-mended	$U_{(OFF)}$ turn off	$I_{(OFF)}$ turn off	ambient temperature range (TS)	type [3]
(V)	(W)	(mA)	(V)	(V)	(V)	(mA)	(°C) [1]	
LP1 "24V"	0,25	20	12,2	28	3,3	7	0 to +40/50/60	01
LP1 "12V"	0,5	33	11,9	23	3,3	10	-10 to +40/50/60	
LP1 "24V"		25	16,4	28	5,7	7		

(◊) **Nominal power ratings of standard versions (with LED indicator and electrical protection)**

Pn	safety parameters: U_i = (DC)	I_i	P_i	L_i	C_i
(W)	(V)	(mA)	(W)	(mH)	(µF)
0,25/0,5	28	300	1,6	0	0

Example of use with a Zener barrier installed in a non-hazardous zone:

safe area (RS interface) **cable** **explosive area**

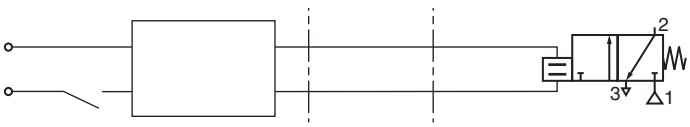

TEMPERATURE CLASSIFICATION TABLES DC (=)

Pi (watt)	maximum ambient °C [1] surface temperature T6 85°C 12V	T6 85°C 24V	T5 100°C 12V	T5 100°C 24V	T4 135°C 12V	T4 135°C 24V	
Insulation class F (155°C) 100% E.D. [2]							
1,6	40	40	50	60	60	60	single solenoid valve
	-	-	-	-	50	50	solenoid valve mounted in series

[1] **Minimum ambient temperature: 0°C (0,25 W) / -10°C (0,5W)**
[2] Coil designed for permanent duty within maximum ambient temperature limits. The solenoid valve must be connected to a special certified electrical supply unit installed in a non-dangerous zone. List of safety barrier manufacturers on the following page.
[3] Refer to the dimensional drawings on the page 4.

00163GB-2017/R01
Availability, design and specifications are subject to change without notice. All rights reserved.

BCAE Automation Solutions
青岛秉诚自动化设备有限公司
地址：中国·青岛市重庆南路99号海尔云街甲3号楼7F
服务热线：4006-918-365
网址：http://www.ivalve.cc
传真：(86-532)585-10-365
Email：sales@bechinas.com

SPECIFICATIONS

orifice size	flow at 6,3 bar l/min (ANR)		flow coefficient Kv		operating pressure differential (bar)		power coil (W)	basic catalogue number with impulse /maintained manual operator
					min.	max. (PS)		=
(mm)	1 → 2	2 → 3	1 → 2	2 → 3		(=)	(=)	
3/2 NC - normally closed (With LED and protection)								
0,6	4	11	0,04	0,16	0	8	0,25	**30215311**IAD
	11	20	0,21	0,44	0	8	0,5	**30215106**IAD

When ordering, please specify in addition to the basic catalogue number:
- voltage:
  0,25 W: 24 V DC
  0,5 W: 12 V DC or 24 V DC

Examples: with connector DIN 43650, 9,4 mm: **30215311**IAD 24V DC
with connector DIN 43650, 9,4 mm: **30215106**IAD 12V DC
with connector DIN 43650, 9,4 mm: **30215106**IAD 24V DC

OPTIONS

- Solenoid valves without LED and electrical protection (0,5 W only)

INSTALLATION

- The solenoid valves can be mounted in any position without affecting operation
- Solenoid valve supplied with mounting screws and mounting pad seal(s)
- Electrical connection between solenoid valve and barrier/interface with cable type A or B according to EN 50039
- Installation on single subbase (3 x M5), brass body, catalogue number **30300001**
- Versions with spade-plug connector type ISO 15217/DIN 43650 form C with 8 mm spacing or M12 connection: contact us
- Installation/maintenance instructions are included with each valve

See the list for compatible interfaces and barriers.
This list is for reference only and the user must take into account the cables and the actual supply voltages for the barriers.
The operating conditions are calculated as follows:

0,25 W: **24 V with LED**

$$I_l\ (mA) = \frac{[\ V_s - 1{,}2 - 0{,}002\ (R_b + R_l)\ ] \times 1000}{(R_c + R_l + R_b)} + 2$$

0,5 W: **12 V or 24 V with LED**

$$I_l\ (mA) = \frac{[\ V_s - 1{,}2 - 0{,}003\ (R_b + R_l)\ ] \times 1000}{(R_c + R_l + R_b)} + 3$$

This value and the maximum barrier/interface current (if it is non-linear) must be greater than 33 mA (12 V with LED), 25 mA (24 V with LED, 0,5 W), 20 mA (24 V with LED, 0,25 W).

I_l (mA) Min. supply current of the product
R_b (Ω) Max. barrier resistance
T_a (°C) Max. ambient temperature
R_l (Ω) Max. resistance of connecting cables
V_s (V) Min. no-load voltage of barrier/interface
R_c (Ω) Max. coil resistance:

$$12\ V\ with\ LED = \frac{288\ (T_a + 234 + 10)}{254} \quad / \quad 24\ V\ with\ LED = \frac{563\ (T_a + 234 + 10)}{254}$$

00163GB-2017/R01
Availability, design and specifications are subject to change without notice. All rights reserved.

BCAE Automation Solutions
青岛莱诚自动化设备有限公司
地址：中国·青岛市重庆南路99号海尔云街甲3号楼7F
服务热线：4006-918-365
网址：http://www.ivalve.cc
传真：(86-532)585-10-365
Email：sales@bechinas.com

COMPATIBLE BARRIERS AND INTERFACES

The 12 V DC and 24 V DC solenoid valves are compatible with the barriers listed in the table below.
0,5 W: The index (1) indicated the 12 V DC versions that are compatible with the 24 V DC barriers.
Located in safe areas, these barriers and interfaces allow to feed the intrinsically safe solenoid valves located in explosive areas. This equipment must be ordered from its respective manufacturers, specifying that they are intended to feed intrinsically safe solenoid valves: 302 1. ...IA., II 1 G Ex ia IIC T6 to T4 Ga, II 1D Ex ia IIIC T85°C to T135°C IP6X Da.

0,5 W

INTERFACES

manufacturer	module type	302 Ex ia 12 V with LED	302 Ex ia 24 V with LED
ABB	DO910S	x	x
AP3	NAEV30-DO2C-A230-0	x	
	NAEV30-DO2C-A115-0	x	
	NAEV30-DO2H-C024-0	x	
	NAEV30-DO4H-C024-0	x	
	NAEV30-DI2-DO1C-A230-0	x	
	NAEV30-DI2-DO1C-A115-0	x	
	NAEV30-DI2-DO1H-C024-0	x	
Bartec	07-7331-2105/1000	x	
	07-7331-2301/1100	x	
CEAG	LB-2101		
	LB-2103		
	LB-2105	x	
	LB-2112	x	x
	FB-2201		
	FB-2203	x	
	FB-2205	x	
	FB-2212	x	x
G.M. international	D1040Q-2	x	
	D1042Q-2	x	x
	D1043Q-2	x	
MTL	815-DO-04	x	x
	4021S	x	
Pepperl + Fuchs	KFD2-SD-Ex1.17	x	
	KFD2-SD-Ex1.36	x	x
	KFD2-SD-Ex1.48	x (1)	
	KFD2-SD-Ex1.48.90A	x (1)	
	KFD2-SL-Ex1.48	x (1)	
	KFD2-SL-Ex1.48.90A	x (1)	
	KFD2-SL2-Ex1	x (1)	x
	KFD2-SL2-Ex1.B	x (1)	x
	KFD2-SL2-Ex1.LK	x (1)	x
	KFD2-SL2-Ex2	x (1)	x
	KFD2-SL2-Ex2.B	x (1)	x
	KFD2-VD-Ex1.1560	x	
	KFD2-VD-Ex1.1835	x	x
Stahl	9475/12-04-11	x	
	9475/12-04-21	x	x
	9475/12-04-31	x	
Turck	MK72-S01-Ex	x	
	MK72-S09-Ex0/24VDC	x	
	MK72-S10-Ex0/24VDC	x	
	MC72-41Ex-T/24VDC	x	
	MC72-42Ex-T/24VDC		x
	MC72-44Ex-T	x	
	MC72-43Ex-T		x
Siemens	ET200IS double	x	x
	6ES7132-7RD20-OAB0	x	

ZENER BARRIERS

manufacturer	module type	302 Ex ia 12 V with LED	302 Ex ia 24 V with LED
CEAG	SB-3722	x	
	SB-0722		
	SB-2420	x	x
	SB-3729	x	x
	SB-3728	x	x
	SB-0728	x	
MTL	MTL 722	x	
	MTL 728	x	x
	MTL 728P	x	x
	MTL 779	x	x
Pepperl + Fuchs	Z728	x	x
	Z728.H	x	x
	Z728.CL	x	x
Stahl	9001/01-199-150-101	x	
	9001/01-280-075-101		
	9001/01-280-085-101	x	x
	9001/01-280-100-101	x	x
	9001/01-280-110-101	x	x
EMERSON	DELTA V		x

For other compatible barriers and interfaces, please ask our product support.

In accordance with the zone classification and the national legislation of each country, apply the certification procedures for the connection of IS-rated products with associated equipment. All information subject to change without notice. All responsibility for the use of products from other suppliers and the possible modifications of their characteristics is disclaimed.

Not compatible (1) Compatible with 24 V DC

0,25 W

INTERFACES

manufacturer	module type	302 Ex ia 24 V with LED
ABB	DO910S	x
EMERSON (EPM)	DELTA V	x
MTL	815-DO-04	x
Siemens	6E S7132-5SB00-OAB0	x
	6E S7132-5SB00-OAB0 2 way	x
	6E S7132-7RD00-OAB0	x
	6E S7132-7RD10-OAB0	x
	6E S7132-7RD10-OAB0 2 way	x
	6ES7132-7RD20-OAB0	x
	6E S7132-7RD20-OAB0 2 way	x
Stahl	9475/12-04-11	x
	9475/12-04-21	x
	9475/12-04-31	x
	9475/12-08-51	x
	9475/12-08-61	x

INTERFACES

manufacturer	module type	302 Ex ia 24 V with LED
Turck	DO040Ex	x
Pepperl + Fuchs	FB 2201	x
	FB 2202	x
	FB 2203	x
	FB 2204	x
	FB 2205	x
	FB 2212	x
	FB 6210B	x
	FB 6211B	x
	FB 6212B	x
	FB 6213B	x
	FB 6214B	x
	FB 6215B	x

For other compatible barriers and interfaces, please ask our product support.

00163GB-2017/R01
Availability, design and specifications are subject to change without notice. All rights reserved.

BCAE Automation Solutions
青岛秉诚自动化设备有限公司
地址：中国·青岛市重庆南路99号海尔云街甲3号楼7F
服务热线：4006-918-365
网址：http://www.ivalve.cc
传真：(86-532)585-10-365
Email：sales@bechinas.com

DIMENSIONS (mm), WEIGHT (kg)

TYPE 01

IEC 335 / DIN 43650
EN/IEC 60079-11/26
II 1 G Ex ia IIC T6 to T4 Ga
II 1 D Ex ia IIIC T85°C to T135°C IP65 Da

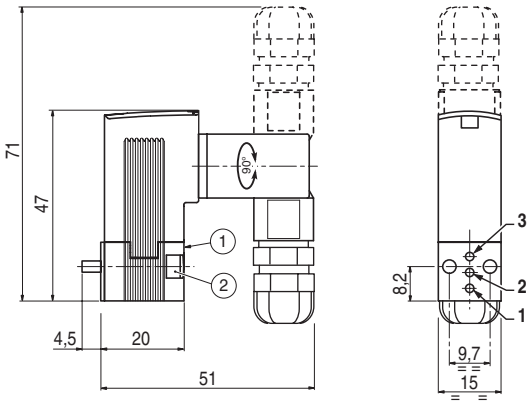

Pneumatic base: ISO 15218
(CNOMO E06.36.120N, size 15)

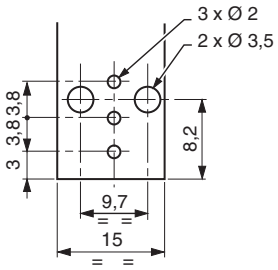

type	weight (1)
01	0,052

(1) Including connector.

(1) Manual operator location
(2) Mounting: 2 M3 x 20 screws

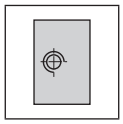

Single subbase

Brass

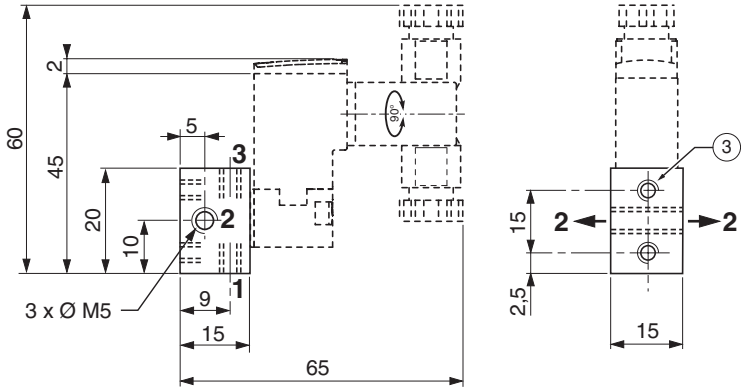

(3) Mounting: 2 holes M3, depth 4,5

Orifice (2) can be connected on the left or on the right of the subbase.

material	catalogue number	weight (1)
brass	**30300001**	0,034

(1) subbase alone

00163GB-2017/R01
Availability, design and specifications are subject to change without notice. All rights reserved.

BCAE Automation Solutions
青岛莱诚自动化设备有限公司
地址：中国·青岛市重庆南路99号海尔云街甲3号楼7F
服务热线：4006-918-365
网址：http://www.ivalve.cc
传真：(86-532)585-10-365
Email：sales@bechinas.com

SOLENOID VALVES

intrinsically safe
II 1G Ex ia IIC T6 Ga, II 2D Ex ib IIIC T85°C Db IP67
ISO 15218 (CNOMO, size 30) interface
direct operated, pad mounting body

NC

3/2
Series
195/LISC

FEATURES

- *Low consumption valves for use in potentially explosive atmospheres according to ATEX-Directive 2014/34/EU*
  EC type examination certificate no.: ***DEKRA 11 ATEX 0091 X***
  IECEx Certificate of Conformity no.: ***IECEx DEK 11.0038X***
- *Compliance with the Essential Health and Safety Requirements has been assured by compliance with the International and European Standards IEC and EN: 60079-0 and 60079-11*
- *The valve's Ex ia protection allows it to be installed in explosive atmospheres up to zone 1. It can be used in the chemical, oil and pharmaceutical industries, or in processing and packaging plants for flammable products (paints, solvents)*
- *Compact, monobloc pilot valve with spade plug connection according to ISO 4400 / EN 175301-803, form A (3 pins)*
- *This solenoid valve can be mounted as operator onto valve 551-553 series SIL3 capable (EXIDA approval)*

GENERAL

Differential pressure 2 - 10 bar [1 bar = 100 kPa]
Flow See «SPECIFICATIONS»
conforming to ISO 6358 C = 3 x 10^{-10} m^3/s.Pa (sonic conductance)
b = 0,4 (critical pressure ratio)
Pneumatic base ISO 15218 (CNOMO E06.05.80N, size 30)
Response time 11 ms

fluids (✳)	temperature range (TS)	seal materials (✳)
air or inert gas dry, filtered (50 µm), without condensate, dew point: -20°C	-40°C to +65°C	FPM (fluoroelastomer)

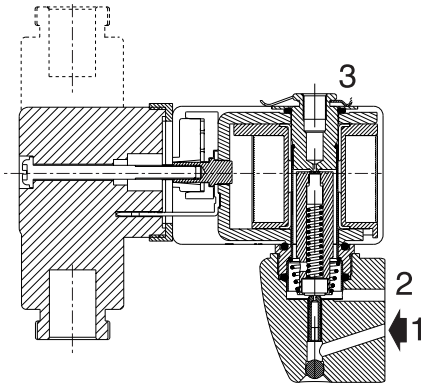

MATERIALS IN CONTACT WITH FLUID

(✳) Ensure that the compatibility of the fluids in contact with the materials is verified

Body Aluminium
Internal parts, core tube Stainless steel
Seals FPM
Subbase PA or zamak

OTHER MATERIALS

Coil Thermoplastic resin

ELECTRICAL CHARACTERISTICS

Coil insulation class F

Connector Spade plug (cable Ø 6-8 mm)
Connector specification ISO 4400 / EN 175301-803, form A
Electrical safety IEC 335
Electrical enclosure protection Moulded IP65 (EN 60529)
Standard voltages DC (=) : 12V .. 24V

SAFETY CODE (1)

II 1G Ex ia IIC T6 Ga
II 2D Ex ib IIIC T 85°C Db IP67

⚠ (1) **For use in zone 0 locations, see the installation conditions given in the I&M instructions.**

voltage (U_n) (max. ripple 10%)	typical functional ratings			R	operator ambient temperature range (TS)	type (3)
	$I_{(ON)}$ min.	$U_{(ON)}$ min.	$P_{(ON)}$ min.	20°C		
(V)	(mA)	(V)	(W)	(Ω)	(°C) (1)	
24	36	12,8	0,46	240	-40 to +65	01

safety parameters				
U_i = (DC)	I_i	P_i	L_i	C_i
(V)	(mA)	(W)	(H)	(µF)
30	300	1,6	0	0

safe area (RS interface) explosive area

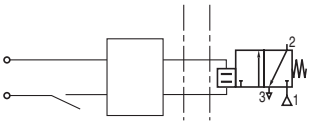

Example of use with a Zener barrier installed in a non-hazardous zone

TEMPERATURE CLASSIFICATION TABLES DC (=)

Pi (watt)	maximum ambient °C (1) / surface temperature T6 85°C
Insulation class F (155°C) 100% E.D. (2)	
1,6	65

(1) **The minimum allowable ambient temperature is -40°C**
(2) This intrinsically safe valve must be connected to a specific, approved power supply (safety barrier or interface) located in a safe area. See list of safety barriers/interfaces on page 2.
(3) Refer to the dimensional drawings on the following page.

SPECIFICATIONS

pipe size	orifice size 1 → 2 (mm)	orifice size 2 → 3 (mm)	flow at 6 bar l/min (ANR) 1 → 2	flow at 6 bar l/min (ANR) 2 → 3	coefficient Kv (l/min) 1 → 2	coefficient Kv (l/min) 2 → 3	operating pressure differential (bar) min.	operating pressure differential (bar) max. (PS) air (✳) =	power coil (W) =	catalogue number without manual operator =
NC - Normally closed										
pad mounting	0,5	0,7	8	15	0,11	0,26	2	10	0,46	**19500036**

01056GB-2017/R01
Availability, design and specifications are subject to change without notice. All rights reserved.

BCAE Automation Solutions
青岛秉诚自动化设备有限公司
地址：中国·青岛市重庆南路99号海尔云街甲3号楼7F
服务热线：4006-918-365
网址：http://www.ivalve.cc
传真：(86-532)585-10-365
Email：sales@bechinas.com

SUBBASES

pipe size	designation	safety code	catalogue number
6/6 polyamide subbases			
instant fittings (1)	single subbase (instant fittings OD 4 mm)	II 2 GD c Ta 50°C T 85°C (T6)	**35300069**
Zamak subbases			
G 1/8 (1), tapped	laterally-connected single subbase	II 2 GD c Ta 50°C T 85°C (T6)	**35300047**

(1) These subbases can be mounted on omega rail to EN 50022 using 2 clips (clips sold in packs of 10, catalogue number: **33400036**).

OPTIONS

- Joinable subbases

INSTALLATION

- The solenoid valves can be mounted in any position without affecting operation
- Solenoid valve supplied with mounting screws
- Pipe connections G 1/8 have standard thread according to ISO 228/1
- Electrical connection between solenoid valve and barrier/interface with cable type A or B according to EN 50039
- Installation/maintenance instructions are included with each valve

RECOMMENDED INTERFACES

Located in safe areas, these interfaces allow to feed the intrinsically safe solenoid valves located in explosive areas.
This equipment must be ordered from its respective manufacturers, specifying that they are intended to feed intrinsically safe solenoid valves 19500036/LISC: II 1G Ex ia IIC T6 Ga, II 2D Ex ib IIIC T85°C Db IP67

INTERFACES		
manufacturer	**module type**	**IIC / IIIC**
Bartec	07-7331-2301/1001	x
ABB	DO910S	x
GEORGIN	BXNE711002	x
	BXNE71100E	x
G.M. International	D1040Q-2	x
	D1042Q-2	x
	D1048S	x
	D1049S	x
	D5048S	x
	D5049S	x
MTL	MTL5522	x
	MTL5521	x
	MTL4524S	x
Pepperl + Fuchs	KFD2-SD-Ex1.36	x
	KFD2-SL2-Ex1	x
	KFD2-SL2-Ex1.B	x
	KFD2-SL2-Ex1.LK	x
	KFD2-SL2-Ex2	x
	KFD2-SL2-Ex2.B	x
	KCD0-SD-Ex1.1245	x
	KFD0-SD2-Ex2.1245	x
	HIC2871	x
	LB-2112	x
	FB-2212	x
Siemens	6ES7132-7RD11-0AB0 2 ways	x
	6ES7132-7RD22-0AB0 2 ways	x
	6ES7132-7GD10-0AB0 2 ways	x
	6ES7132-7GD20-0AB0 2 ways	x
	ET200IS double	x
	6ES7132-7RD10-OAB0 2 ways	x
	6ES7132-7RD20-OAB0 2 ways	x
Stahl	9475/12-04-11	x
	9475/12-04-21	x
	9475/22-04-21	x
	9475/32-04-12	x
	9475/32-04-22	x
	9475/32-04-72	x
	9175/10-14-11	x
	9175/20-14-11	x
	9176/10-14-00	x
	9176/20-14-00	x
	9001/01-280-100-101	x
Turck	MC72-41Ex-T/24VDC	x
	MC72-44Ex-T	x
WAGO	750-535	x

ZENER BARRIERS		
manufacturer	**module type**	**IIC / IIIC**
CEAG	SB-3722	x
	SB-2420	x
	SB-3729	x
	SB-3728	x
MTL	MTL 728	x
	MTL 728P	x
	MTL 779	x
Pepperl + Fuchs	Z728	x
	Z728.H	x
	Z728.CL	x
Stahl	9001/01-280-085-101	x
	9001/01-280-100-101	x
	9001/01-280-110-101	x

In accordance with the zone classification and the national legislation of each country, apply the certification procedures for the connection of IS-rated products with associated equipment.
All information subject to change without notice. All responsibility for the use of products from other suppliers and the possible modifications of their characteristics is disclaimed.

ORDERING EXAMPLES:

19500036 . 12...24V / DC

basic number — voltage

01056GB-2017/R01
Availability, design and specifications are subject to change without notice. All rights reserved.

BCAE Automation Solutions
青岛莱诚自动化设备有限公司
地址：中国·青岛市重庆南路99号海尔云街甲3号楼7F
服务热线：4006-918-365
网址：http://www.ivalve.cc
传真：(86-532)585-10-365
Email：sales@bechinas.com

DIMENSIONS (mm), WEIGHT (kg)

TYPE 01

Spade plug
IEC 335 / DIN 43650
II 1G Ex ia IIC T6 Ga
II 2D Ex ib IIIC T85°C Db IP67

19500036

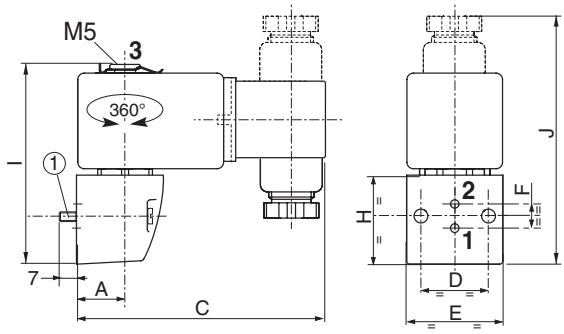

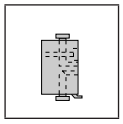

TYPE 02

Single instant fitting subbase
Polyamide

35300069

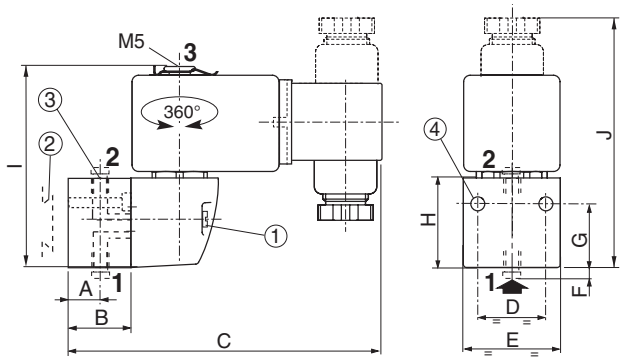

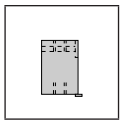

TYPE 03

Single subbase
Zamak

35300047

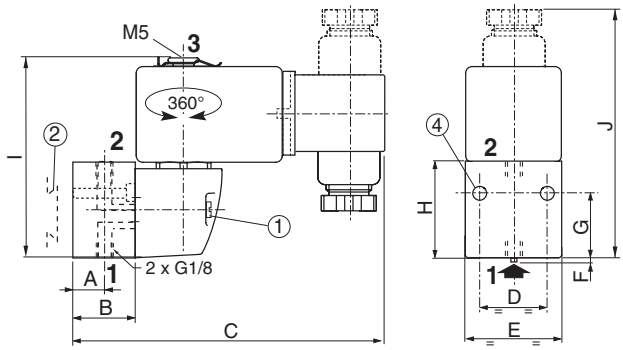

type	catalogue number	A	B	C	D	E	F	G	H	I	J	weight [2]
01	19500036	15,5	-	79	21	30	7,5	15	30	63	75	0,22
02	35300069	13	20	99	23	33	4	22,5	30	67	80	0,20
03	35300047	15	25	104	21	31	3,5	30	36	70	83	0,20

[2] Incl. coil(s) and connector(s).

1. Mounting: two CM 4 x 35 screws
2. Adaptable clips
3. Instant-fitting connection for OD 4 mm tube
4. Two dia. 3,5 mm securing holes

01056GB-2017/R01
Availability, design and specifications are subject to change without notice. All rights reserved.

BCAE Automation Solutions
青岛秉诚自动化设备有限公司
地址：中国·青岛市重庆南路99号海尔云街甲3号楼7F
服务热线：4006-918-365
网址：http://www.ivalve.cc
传真：(86-532)585-10-365
Email：sales@bechinas.com

ACCESSORIES

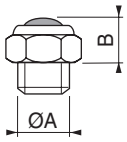

ØA	M5
B	4,5

exhaust protector
(stainless steel)
catalogue number: **34600484**

01056GB-2017/R01
Availability, design and specifications are subject to change without notice. All rights reserved.

BCAE Automation Solutions
青岛莱诚自动化设备有限公司
地址：中国·青岛市重庆南路99号海尔云街甲3号楼7F
服务热线：4006-918-365
网址：http://www.ivalve.cc
传真：(86-532)585-10-365
Email：sales@bechinas.com

MINI-SOLENOID VALVES

non-sparking protection

II 3G Ex **nA** IIC T6..T4 Gc, II 3D Ex tc IIIC IP65 T85°C..T135°C Dc

ISO 15218 (CNOMO, size 15) interface

direct operated, pad mounting body, connector size 15

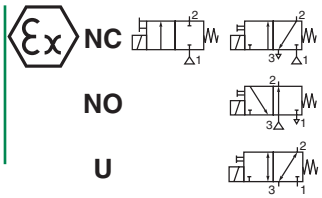

2/2-3/2 Series **302**

FEATURES

- *Mini-low consumption valves for use in potentially explosive atmospheres according to ATEX-Directive 2014/34/EU*
  EC type examination certificate no.: ***INERIS 10 ATEX 3016X***
- *Compliance with the Essential Health and Safety Requirements has been assured by compliance with European Standards EN 60079-0, EN 60079-15 and EN 60079-31*
- *Compact, monobloc solenoid pilot valve with spade-plug connector type DIN 43650, form C with 9,4 mm spacing*
- *Version without integrated LED and electrical protection*
- *Universal version for vacuum operation (3/2 way)*

GENERAL

Differential pressure	See «SPECIFICATIONS» [1 bar = 100 kPa]
Pneumatic base	ISO 15218 (CNOMO E06.36.120N, size 15)
Connection	Subbase
Response time	8 - 15 ms

fluids (∗)	temperature range (TS)	seal materials (∗)
air or inert gas filtered at 50 µm, lubricated or not	- 25°C to + 40°C (LP2) (1)	NBR (nitrile) FPM (fluoroelastomer)

(1) LP2: see "electrical characteristics" table

MATERIALS IN CONTACT WITH FLUID

(∗) Ensure that the compatibility of the fluids in contact with the materials is verified

Body	PARA
Internal parts	POM, PET, stainless steel and brass
Seals	NBR (disc), FPM (others)
Pneumatic interface seal	TPE

OTHER MATERIALS

Coil	Thermoplastic PET
Enclosure with PVC cable	PP (polypropylene) glass-fibre reinforced

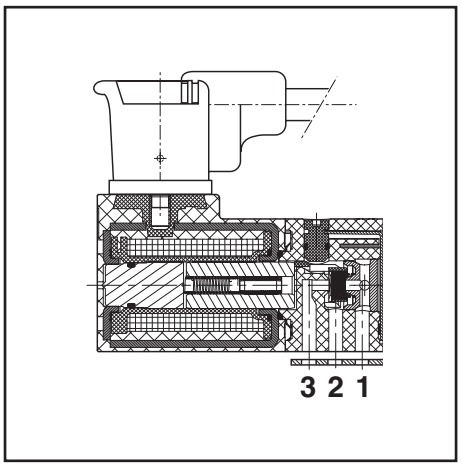

ELECTRICAL CHARACTERISTICS

Coil insulation class	F
Connector	Spade plug (2m cable length)
Connector specification	DIN 43650, 9,4 mm, form C
Electrical safety	IEC 335
Electrical enclosure protection	Moulded IP65 (EN 60529)
Standard voltages	DC (=) : 24V
(Other voltages on request)	AC (~): Contact us

SAFETY CODE

II 3G Ex nA IIC T6..T4 Gc
II 3D Ex tc IIIC IP65 T 85°C..T 135°C Dc

coils		power ratings	max. ambient temperature °C (2)			type (4)
power ranges	voltages	hot/cold =	surface temperature			
	=	(W)	T6 85°C	T5 100°C	T4 135°C	
LP2 (3)	24	1 / 1,2	40	55	60	01

(4) Refer to the dimensional drawings on the following page.

For versions with LED indicator and electrical protection: Contact us

(2) **The minimum allowable ambient temperature is -25°C.** Actual temperature range can be limited depending on valve operation limits.

(3) Voltage: -15% / +20%

SPECIFICATIONS

orifice size	flow at 6 bar l/min (ANR)		flow coefficient Kv		operating pressure differential (bar)		power ranges	basic catalogue number manual operator impulse		maintained	
(mm)					min.	max. (PS)		~	=	~	=
	1 → 2	2 → 3	1 → 2	2 → 3							
2/2 NC - Normally closed (Without LED and protection)											
1,5	39	-	0,50	-	0	3	LP2	-	**30211022NAD**	-	**30211023NAD**
3/2 NC - normally closed (Without LED and protection)											
0,6	11	20	0,11	0,26	0	10	LP2	-	**30211109NAD**	-	**30211110NAD**
0,8	17	28	0,22	0,35	0	8	LP2	-	**30211112NAD**	-	**30211113NAD**
1,1	32	51	0,35	0,50	0	5	LP2	-	**30211118NAD**	-	**30211119NAD**
1,5	39	53	0,50	0,56	0	3	LP2	-	**30211124NAD**	-	**30211125NAD**
	3 → 2	2 → 1	3 → 2	2 → 1							
3/2 NO - normally open (Without LED and protection)											
0,8	20	17	0,26	0,20	0	8	LP2	-	**30211130NAD**	-	-
1	28	32	0,35	0,35	0	5	LP2	-	**30211136NAD**	-	-
1,5	53	39	0,56	0,50	0	2	LP2	-	**30211142NAD**	-	-
	1 ↔ 2	2 ↔ 3	1 ↔ 2	2 ↔ 3							
3/2 U - universal (Without LED and protection)											
0,8	17	20	0,20	0,26	0	6	LP2	-	**30211148NAD**	-	**30211149NAD**

When ordering, please specify, in addition to the basic catalogue number, the type of current: voltage

Examples: 24V DC: **30211009NAD** 24V DC

00166GB-2017/R01
Availability, design and specifications are subject to change without notice. All rights reserved.

All leaflets are available on: www.asco.com

BCAE Automation Solutions
青岛秉诚自动化设备有限公司
地址：中国·青岛市重庆南路99号海尔云街甲3号楼7F
服务热线：4006-918-365
网址：http://www.ivalve.cc
传真：(86-532)585-10-365
Email：sales@bechinas.com

OPTIONS AND ACCESSORIES

- Seals and disc made of FPM (fluoroelastomer)
- Version without manual operator
- Version with pneumatic-electric interface

INSTALLATION

- The solenoid valves can be mounted in any position without affecting operation
- **Pre-wired connector, supplied and certified with the product (DIN 43650, 9,4 mm, form C, with 2 m cable length). For connection, only use the connector supplied with the product**
- Solenoid valve supplied with mounting screws and mounting pad seal(s)
- Installation/maintenance instructions are included with each valve

DIMENSIONS (mm), WEIGHT (kg)

TYPE 01

IEC 335 / DIN 43650
IP65

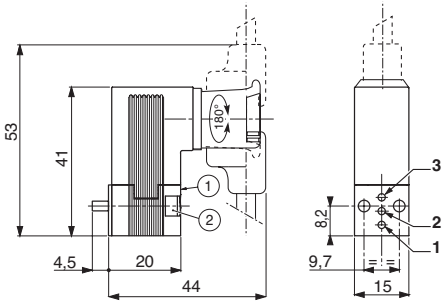

① Manual operator location
② 2 mounting screw M3 x 20

function		connection 1	2	3
2/2 way				
	NC	P	U	-
3/2 way				
	NC	P	U	E
	NO	E	U	P
universal	MIX	P2	U	P1
	SEL	U 2	P	U 1

P: Pressure U: Outlet
E: Exhaust

Subbase mounting surface: ISO 15218
(CNOMO E06.36.120N, size 15)

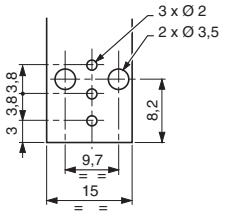

weight (1)
0,14

(1) with connector.

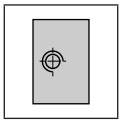

Single subbase

Aluminium or brass

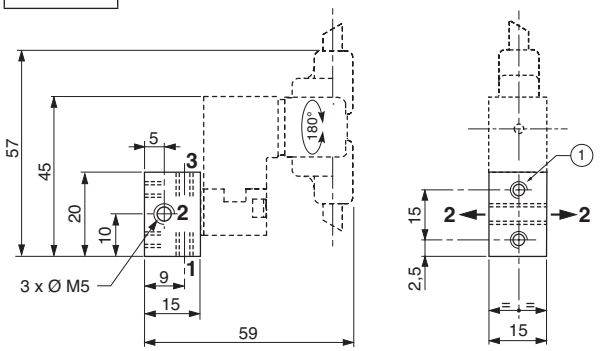

① Mounting: 2 holes M3, depth 4,5

Orifice (2) can be connected on the left or on the right of the subbase.

material	catalogue number	weight (1)
aluminium	**88263002**	0,011
brass	**30300001**	0,034

(1) subbase alone

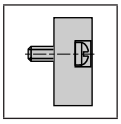

Adapter CNOMO size 30

(only for NC version)
Aluminium

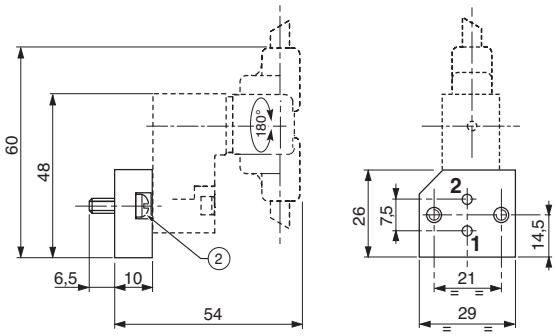

② Mounting: 2 screws M4 x 10 (supplied)

catalogue number	weight (2)
88263001	0,018

(2) adapter alone

00166GB-2017/R01
Availability, design and specifications are subject to change without notice. All rights reserved.

BCAE Automation Solutions
青岛莱诚自动化设备有限公司
地址：中国·青岛市重庆南路99号海尔云街甲3号楼7F
服务热线：4006-918-365
网址：http://www.ivalve.cc
传真：(86-532)585-10-365
Email：sales@bechinas.com

OPERATORS

for dust applications
II 3 D Ex tc IIIC T115°C Dc IP65X
II 3 D Ex tc IIIC T110°C Dc IP65X
moulded coils types with connectors

Series
SG

FEATURES

- *Explosionproof operator for use in dust application with potentially explosive atmospheres according to ATEX-Directive 2014/34/EU*
- *Compliance with the Essential Health and Safety Requirements has been assured by compliance with the European Standards EN 60079-0 and EN 60079-31*
- *The assembly consisting of the coil and connector has IP65 protection*
- *The operators are designed for installation on a wide range of valves*
- *Available series: 189-189 banjo-190-238-256-262-263-314-356-541-541 compact-542-543-551-553-353-355 [Dust Collector Systems (DCS)]*

CONSTRUCTION

Coil	Epoxy encapsulated
Connector enclosure	Glass-fibre filled PA
Connector specification	
size 22 (11 mm)	EN 175301-803 industry standard form B
size 30 (18 mm)	ISO 4400 / EN 175301-803, form A
Core tube & **Plugnut**	Stainless steel
Nameplate	Polyester
Safety code	SG (solenoid valves): Ex II 3 D, Ex tc IIIC T115°C Dc IP65X SG (Dust Collector Systems): Ex II 3 D, Ex tc IIIC T110°C Dc IP65X]
Seals	FPM o-ring, EPDM gasket

ELECTRICAL CHARACTERISTICS

(Other voltages and 60 Hz on request)

DC (=) : 12V - 24V - 48V - 110V
AC (~) : 24V - 48V - 115V - 230V / 50 Hz

	Size 22	**Size 30**
Number of contacts	2 + common earth	2 + common earth
Distance between contacts	11 mm	18 mm
Connector	Spade plug (cable Ø 4,5-7 mm)	Spade plug (cable Ø 4,5-10 mm)
Electrical safety	IEC 335	IEC 335
Electrical enclosure protection	IP65 (EN 60529)	IP65 (EN 60529)
Number of wires (with cable)	3 x ≤ 1,5 mm²	3 x ≤ 1,5 mm²

	max. AC power (W)	max. DC power (W)
SG	17,1	11,6
DCS	11,1	21,2

TEMPERATURE CLASSIFICATION TABLES

	surface temperature	min. ambient temperature	max. ambient temperature	E.D.[1]
SG	115°C	-10°C	+50°C	100%
DCS	110°C	-10°C	+60°C	10%

[1] Duty factor.

ORDERING EXAMPLES

A valve with the explosionproof operator will be identified:

with the prefix SG before the catalogue number

Series 189, 189 banjo, 190, 541, 541 compact, 542, 543

With cable gland connector

SG 54100883 . 230 / 50
SG 19000006 . 24 / DC
SG 18900001 . 230 / 50-60
SG 18900047 . 230 / 50-60

option code for ATEX compliance (prefix)
solenoid valve catalogue number
voltage

Series 238 (3/8 to 1), 256, 356, 551 (integrated pilot), 553, 353 (DCS)

SG E238D001 . 230 / 50-60
SG G256B002VMS . 115 / 50-60
SG G353A047 24 / DC
SG G551A001MS . 230 / 50-60

option code for ATEX compliance (prefix)
solenoid valve basic number
voltage

with electrical interface SG in the 15-digit product code

Series 262, 263, 314

15-DIGIT PRODUCT CODE

E	262	K	232	**SG**	V00	H1
E	263	K	232	**SG**	V00	F8

Thread connection
Product series
Revision letter
Valves version
Electrical interface
Options
Voltage - class

01059GB-2017/R01
Availability, design and specifications are subject to change without notice. All rights reserved.

BCAE Automation Solutions
青岛秉诚自动化设备有限公司
地址：中国·青岛市重庆南路99号海尔云街甲3号楼7F
服务热线：4006-918-365
网址：http://www.ivalve.cc
传真：(86-532)585-10-365
Email：sales@bechinas.com

INSTALLATION

- The package consists of the solenoid valve, the coil (installed) and the connector (not installed)
- The coil is provided with an earthing connection
- Additional protection is necessary to protect the coil against mechanical stress and UV radiation
- Easy connection with spade plug connector
- Installation/maintenance instructions are included with each coil
- The spare part coil is always delivered with the connector in a unique reference

DIMENSIONS (mm), WEIGHT

TYPE 01

Coil + connecteur taille 22 (11 mm)
EN 175301-803 standard industriel forme B
IP65

Série (XM5): 189, 189 banjo, 256, 238 (3/8..1), 353 (DCS), 355B6 (DCS), 356, 541, 541 compact, 542, 543, 551

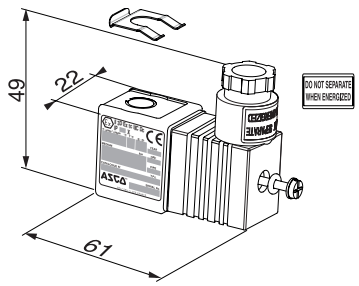

TYPE 02

Coil + connector size 30 (18 mm)
ISO 4400 / EN 175301-803, form A
IP65

Series (C25): 190, 238 (3/8..1), 256 (1/4), 356 (1/4), 541, 542, 543, 553

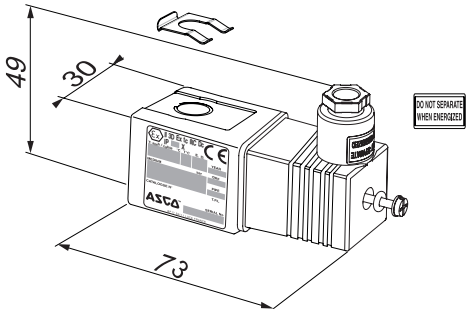

TYPE 03

Coil + connector size 30 (18 mm)
ISO 4400 / EN 175301-803, form A
IP65

Series (M6 II): 262, 263, 314, 353 (DCS), 355B8 (DCS)

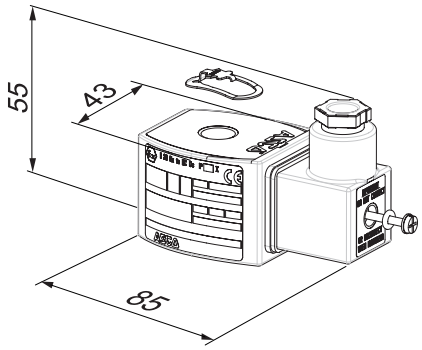

TYPE 04

Coil + connector size 30 (18 mm)
ISO 4400 / EN 175301-803, form A
IP65

Series (MXX-II) 262, 263, 314, 353 (DCS)

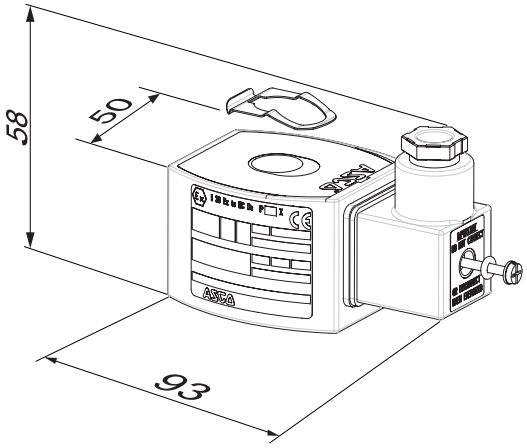

type	weight (kg)
XM5	0,092
C25	0,156
M6-II	0,286
MXX-II	0,376

01059GB-2017/R01
Availability, design and specifications are subject to change without notice. All rights reserved.

BCAE Automation Solutions
青岛莱诚自动化设备有限公司
地址：中国·青岛市重庆南路99号海尔云街甲3号楼7F
服务热线：4006-918-365
网址：http://www.ivalve.cc
传真：(86-532)585-10-365
Email：sales@bechinas.com

CABLE GLANDS

for potentially explosive atmospheres
flameproof enclosure
II 2 G Ex d IIC, II 2 D Ex tb IIIC
for armoured and unarmoured cables, 1/2 NPT - 3/4 NPT

Series
882

FEATURES

- *Explosionproof material intended for use in potentially explosive atmospheres according to ATEX-Directive 2014/34/EU*
  EC type examination certificate no.: ***INERIS 12 ATEX 0032 X***
  IECEx Certificate of Conformity no.: ***IECEx INE 12.0025 X***
- *Compliance with the Essential Health and Safety Requirements has been assured by compliance with the International and European Standards EN-IEC 60079-0, EN-IEC 60079-1 and EN-IEC 60079-31*
- *Cable glands for armoured and unarmoured cables can be fitted to Ex d operators*

GENERAL

	1/2 NPT	3/4 NPT
Protection, unarmoured cable	IP68 (10 bar), on outer sheath	IP68 (10 bar), on outer sheath
Protection, armoured cable	IP68 (10 bar), on outer/inner sheath	IP68 (10 bar), on outer/inner sheath
	0 to 1,25 mm armour	-
Unarmoured cable	I.D. 7 to 12 mm	I.D. 10 to 16 mm
	I.D. 13,5 to 20,5 mm	-
Armoured cable	O.D. 10 to 16 mm	O.D. 13,5 to 21 mm
	I.D. 7 to 12 mm	I.D. 10 to 15,5 mm

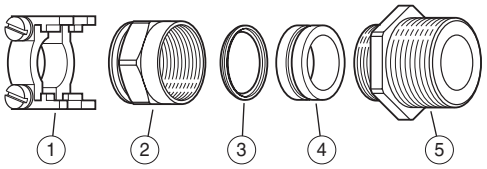

1/2 - 3/4 NPT, for unarmoured cable

1. cable clamp
2. nut
3. backup ring
4. grommet
5. adapter (1/2 or 3/4 NPT)

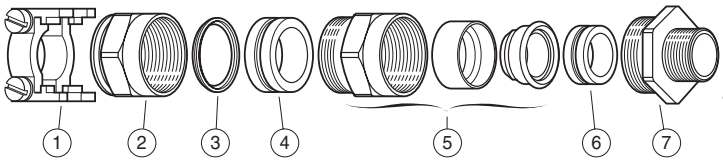

1/2 - 3/4 NPT, for armoured cable

1. cable clamp
2. nut
3. backup ring
4. grommet (internal sealing)
5. armour clamp
6. grommet (external sealing)
7. adapter (1/2 or 3/4 NPT)

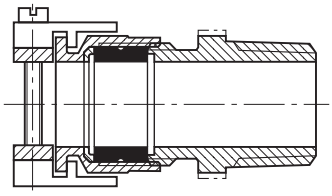

unarmoured (1/2 - 3/4 NPT)

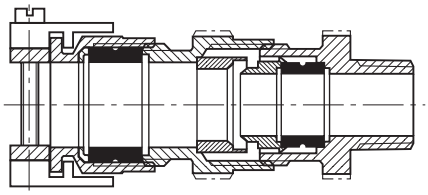

armoured (1/2 - 3/4 NPT)

CONSTRUCTION

Adapter	Nickel-plated brass
Grommet	NBR
Breaker piece	Stainless steel

SAFETY CODE

Ex II 2 G Ex d IIC
II 2 D Ex tb IIIC

SPECIFICATIONS

pipe size	cable		type	catalogue number	
	outer diameter (mm)	inner diameter (mm)		unarmoured cable	armoured cable
1/2 NPT and 3/4 NPT versions					
1/2 NPT	-	7 to 12	01	**88200011**	-
	10 to 16	7 to 12	02	-	**88200014**
3/4 NPT	-	10 to 16	01	**88200007**	-
	-	13,5 to 20,5	01	**88200010**	-
	13,5 to 21	10 to 15,5	02	-	**88200013**

00138GB-2018/R01
Availability, design and specifications are subject to change without notice. All rights reserved.

BCAE Automation Solutions
青岛秉诚自动化设备有限公司
地址：中国·青岛市重庆南路99号海尔云街甲3号楼7F
服务热线：4006-918-365
网址：http://www.ivalve.cc
传真：(86-532)585-10-365
Email：sales@bechinas.com

ACCESSORIES

- 3/4 NPT to 1/2 NPT reducer, catalogue number: **88200012**
- Other cable glands on request

INSTALLATION

- The cable gland can be supplied pre-installed on Ex d enclosure

DIMENSIONS (mm), WEIGHT (kg)

TYPE 01
1/2 - 3/4 NPT
Unarmoured cable

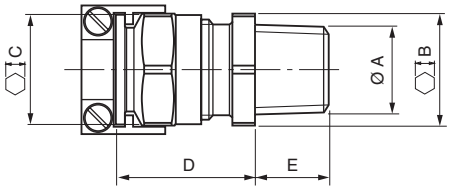

TYPE 02
1/2 - 3/4 NPT
Armoured cable

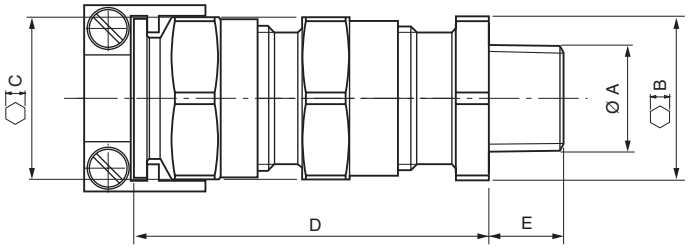

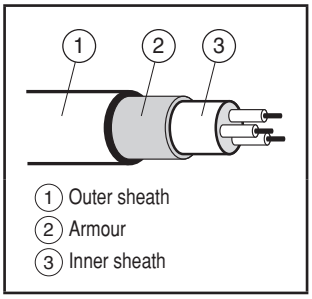

type	Ø A	B	C	D	E	weight
01	1/2 NPT	24	19	27,5	16	0,04
	3/4 NPT (1)	30	24	32	16	0,055
	3/4 NPT (2)	30	30	26,5	16	0,07
02	1/2 NPT	24	24	51	16	0,09
	3/4 NPT	30	30	57	16	0,17

(1) Catalogue number: 88200007
(2) Catalogue number: 88200010

00138GB-2018/R01
Availability, design and specifications are subject to change without notice. All rights reserved.

BCAE Automation Solutions
青岛莱诚自动化设备有限公司
地址：中国·青岛市重庆南路99号海尔云街甲3号楼7F
服务热线：4006-918-365
网址：http://www.ivalve.cc
传真：(86-532)585-10-365
Email：sales@bechinas.com